EVERY THING YOU NEED TO KNOW ABOUT YOUR

XO

UNDERCOUNTER

WHERE THINGS ARE

Before You Get Started 4 - 7
Installer Checklist
Find Your Model
Safety Instructions
Electrical and Grounding Instructions

Installation Instructions 8 - 11
Sizes and Installation Dimensions
Leveling Your XO
Door Handle Installation

Operating Instructions 12 - 18
Control System Overview
Setting the Temperature
Functions
Wine and Beverage Storage
Shelf Instructions

Care and Cleaning 19 - 20
Helpful Hints
Cleaning the Interior / Exterior
Changing the Carbon Air Purification Filter

FAQ's 21 - 22
Before You Call For Service
Warranty

PLEASE READ AND FOLLOW
ALL SAFETY INSTRUCTIONS

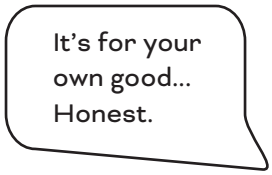

DEAR INSTALLER
THE JOB ISN'T DONE UNTIL

To ensure that the installation process is successfully completed,
here are few things to review...

- ○ Is the unit plugged in?
- ○ Are the controls on? (Panel will illuminate.)
- ○ Are the controls operating correctly?
- ○ Has the unit been properly leveled - both side to side and front to back - with all 4 leveling feet securely making contact with the floor?
- ○ After installation, does the door open sufficiently to fully extend the shelves?
- ○ Is the door sealing properly?
- ○ Is the handle secure?
- ○ Have you thoroughly inspected the stainless steel surfaces for any imperfections?
- ○ Have you reviewed this manual with the customer and explained the unit's operation and care?
- ○ Has the customer received copies of the literature and keys?
- ○ Have you properly disposed of all packing materials properly (recycle, please)?
- ○ Is the customer satisfied?

DANGER

RISK OF CHILD ENTRAPMENT!

An empty refrigerator is a very dangerous attraction to children.

Remove door gaskets, latches, lids, lock and/or doors from unused or discarded appliances, or take other actions to guarantee them harmless.

Always dispose of old appliances in accordance with local laws and regulations.

THESE ARE THE MODELS COVERED IN THIS BOOK

WINE COOLERS

15”	XOU15WGS
24”	XOU24WGS XOU24WDZGS

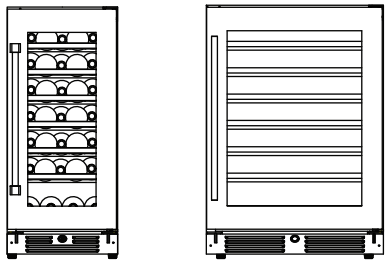

BEVERAGE CENTERS

15”	XOU15BCGS XOU15BCSF
24”	XOU24BCGS XOU24BCSF XOU24BWDDGS
30”	XOU30BWDDGS

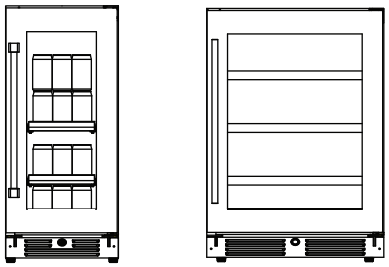

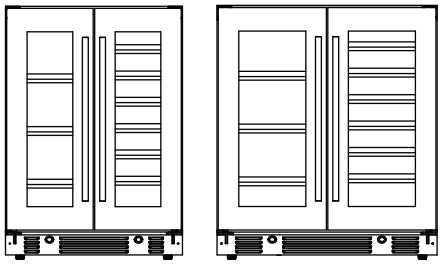

TAKE A MINUTE TO CIRCLE YOUR MODEL ABOVE AND RECORD YOUR SERIAL NUMBER HERE IN CASE YOU NEED IT LATER

YOUR SAFETY MATTERS

Please read through completely before using your XO Unit

To prevent damage to the door gasket, the door must be opened all the way before pulling shelves out.

The appliance must be positioned so that the plug is accessible.

Empty your XO unit before attempting to move the appliance. Moving while loaded may damage or distort the frame.

The compressor will get HOT during operation / touching it may cause injury.

During installation follow all safety tips provided in this manual / appropriate safety equipment such as safety glasses and work gloves should be worn.

Two people should move or lift your XO unit to prevent injury or damage.

Remove all interior and exterior packing materials prior to installation and dispose of properly.

Never cover the bottle racks with foil or other material which will impede internal air circulation.

For maximum efficiency, keep the door tightly shut unless loading or unloading and never overload your XO unit.

Before installing, allow your XO unit to sit upright for 2 hours at the install site. This will allow the cooling system to stabilize after transportation. Failure to follow this step may cause problems.

Never store perishable food products such as meat or cheese in your wine cooler or beverage center.

Location

Your XO unit should be located away from direct sunlight and heat sources (stove, heaters, etc.) which may increase electrical consumption. High or low ambient temperature may cause units to work improperly.

The floor must be strong enough to support your XO unit fully loaded.

Your XO unit must not be installed in areas of where water or excessive moisture are present.

Your XO unit must not be installed near where flammable, corrosive or hazardous materials are present.

Your XO unit's final installation must observe the correct minimum air clearances around and behind the unit to ensure adequate ventilation. In addition, all ventilation openings must be kept clear and free of obstructions, failure to do so will result in damage to the unit.

WARNING

NEVER use external heat sources to accelerate defrosting
NEVER permit unauthorized service or modifications to your XO unit
NEVER tamper with the sealed refrigerant system - this unit uses R600A Refrigerant which is flammable. It should never be used in the vicinity of any flammable or explosive ignition sources.
ALWAYS FOLLOW THE ELECTRICAL SAFETY INSTRUCTIONS OUTLINED IN THIS MANUAL.

ELECTRICITY - THIS IS SERIOUS

Failure To Follow All Electrical Safety Measures May Result in Serious Injury, Fire Or Death

All electrical work should only be performed by an experienced, licensed electrician.

All XO units MUST be grounded for safe operation and come equipped with a 3 Prong molded cord/plug for that purpose.

NEVER remove or disable the 3rd prong with an adapter.

NEVER use an extension cord to operate your XO unit.

Your XO unit is built to operate on 115V 60Hz and should be plugged directly into a dedicated 15 amp 3 prong outlet. If you are uncertain as to the voltage, amperage capacity or if the 3rd prong is properly grounded - consult a licensed electrician.

To maximize the depth of the installation recess - your outlet should be mounted flush with the wall.

Your XO unit should not share the circuit with any other electrical devices as this may cause overloading, overheating, blown fuses or tripping circuit breakers. In a worst case this can pose a fire hazard.

NEVER handle your XO unit in wet conditions as this can pose a severe danger of electric shock.

Exercise care when moving your XO unit to avoid damage to the electrical cord. If the electrical cord of your XO unit becomes worn or damaged it must be replaced immediately by a qualified technician.

NEVER unplug your unit by pulling on the cord. Unplug by gripping the plug firmly and pull out straight from the outlet.

INDOOR USE ONLY:

XO Refrigerators, wine cellars and beverage centers described in this manual are rated for indoor use only.

Your XO Unit was designed to operate in a room temperature ambient condition between 60°F and 90°F.

Use in any area which is not temperature controlled within that range, such as a garage or porch may cause your XO unit to fail to function properly. Use in any uncontrolled area or otherwise exposed to the elements is hazardous and voids the warranty.

For outdoor installations - consult XO or your local XO dealer regarding an outdoor rated model.

In regions where high humidity exists condensation may appear on the glass and/or gasket seals. For best operation, keeping the unit fully stocked with product will reduce this.

SERVICE	**115V - 60 Hz - 1 phase**
AMPS	**15 Amp Circuit Breaker**
Requires a Dedicated Outlet	
GFI required for Outdoor Installations	
All electrical work must be performed by a licensed electrician	

Serious injury, fire or death...
Okay -
You've got my attention!

XO

A PERFECT FIT

USE FREE STANDING - OR - INSTALL UNDER COUNTER

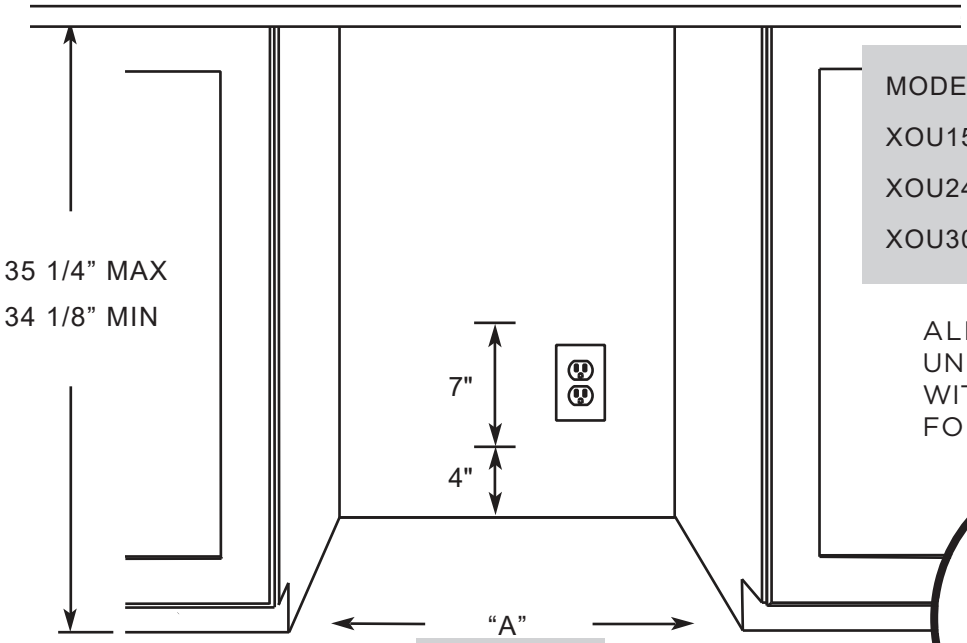

MODEL	DIMENSION "A"
XOU15	15" MIN
XOU24	24" MIN
XOU30	30" MIN

ALL XO UNDERCOUNTER UNITS ARRIVE PRE-WIRED WITH LOW PROFILE PLUGS FOR EASY INSTALLATION

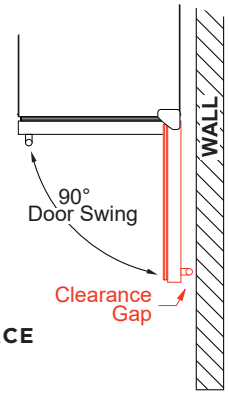

SS DOOR MODELS INSTALLING WITH THE HINGE SIDE NEXT TO A WALL - LEAVE A 2 1/4" SPACE DOOR MUST BE ABLE TO OPEN 90°.

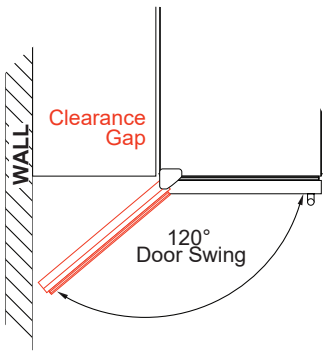

FRENCH DOOR MODELS INSTALLING NEXT TO A WALL - DOOR MUST BE ABLE TO OPEN 120°.

IF THE DOOR CAN'T OPEN FULLY - YOU CAN'T PULL THE SHELVES OUT.

If you need a little more space when installing -
you might use a recessed outlet or cut the adjoining cabinet wall to reach an outlet there...

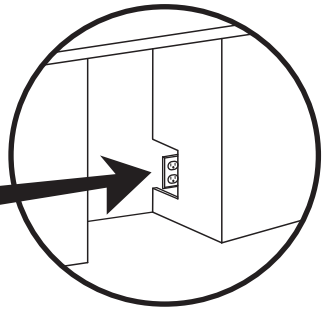

A PERFECT FIT

YOUR XO IS THIS BIG (OR SMALL, AS THE CASE WOULD BE)

HEIGHT & WIDTH

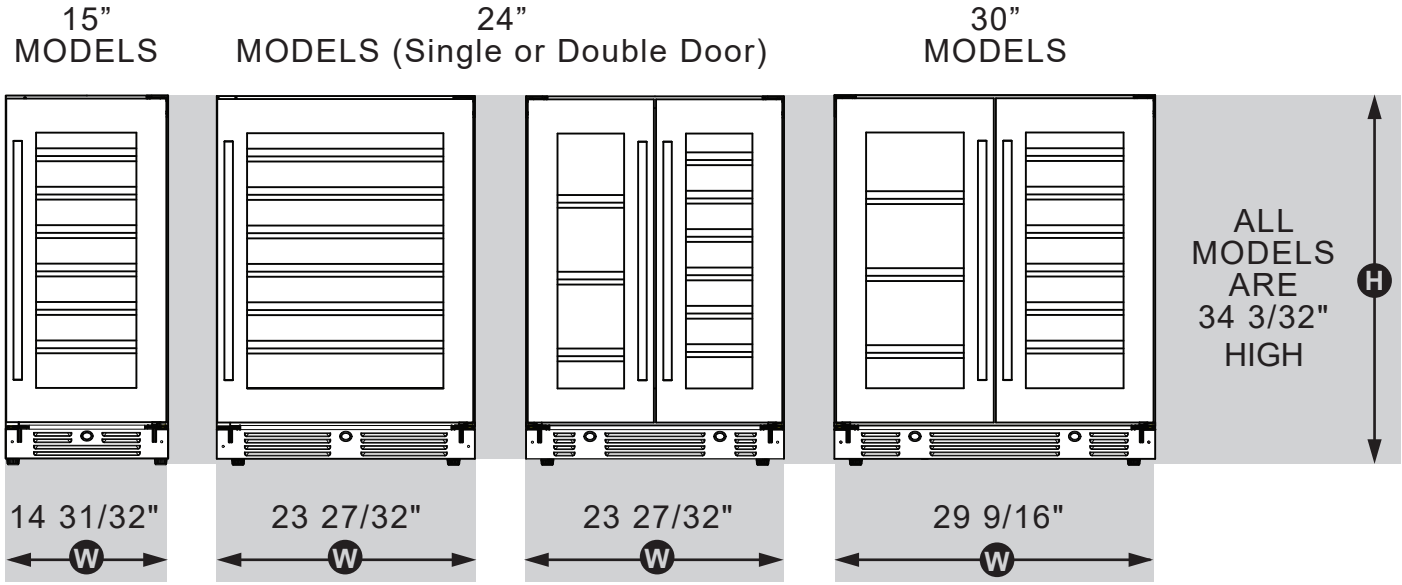

DEPTH

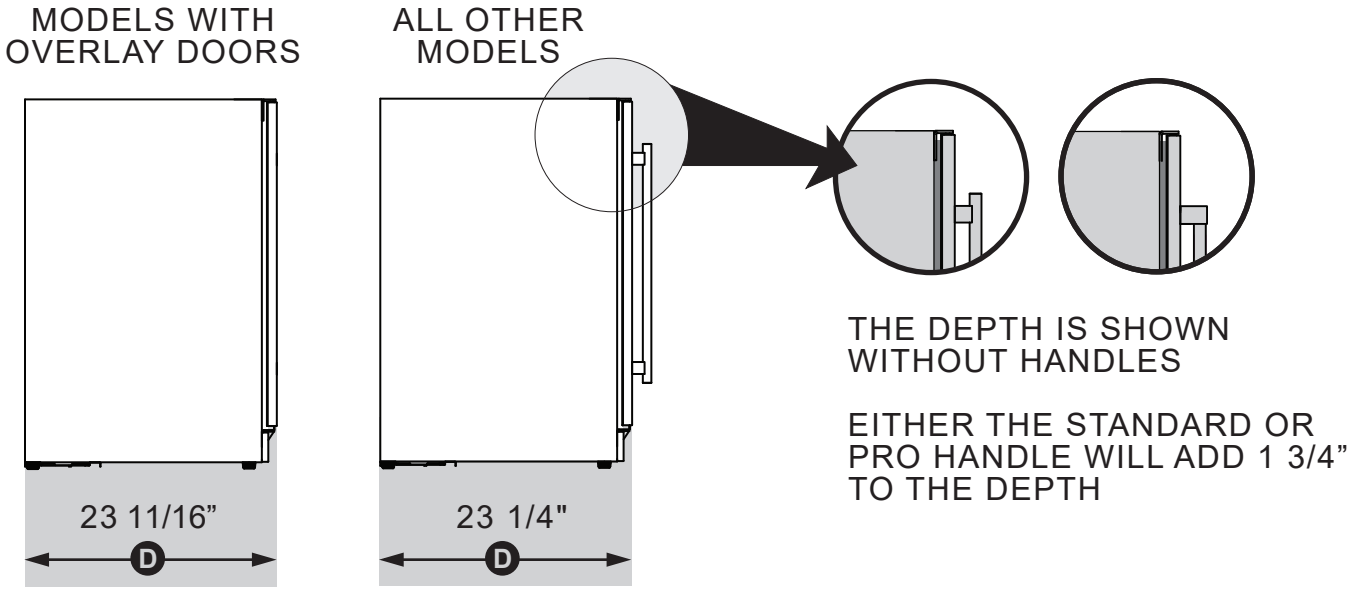

IT'S LIKE ZEN - BUT COOLER

GET YOUR LEVEL OUT

DO NOT NEGLECT THIS IMPORTANT STEP

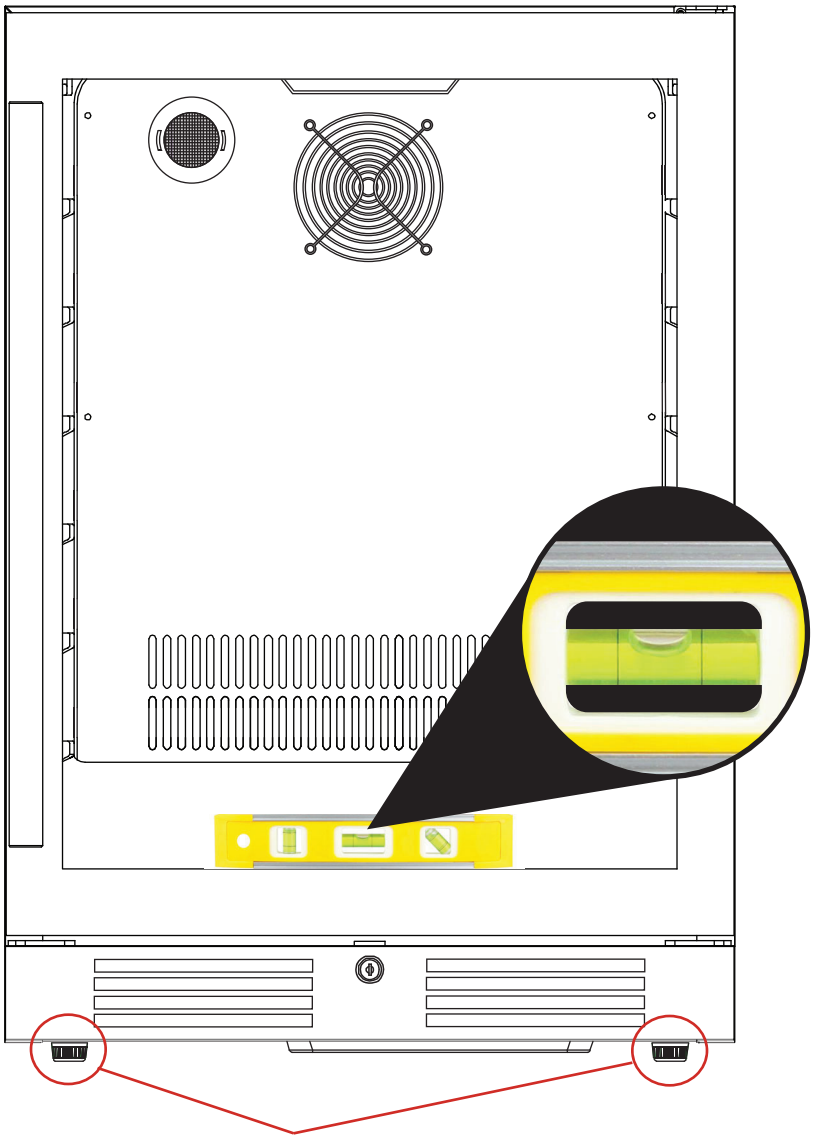

Rotate to raise or lower the LEVELING LEGS located at each of the four corners until all four legs are seated firmly on the floor and the interior floor of the unit is level both front to back and side to side.

Failure to follow this important step may cause problems with proper door operation, excessive condensation, vibration and noise.

GET A GRIP

IN FACT - PICK THE STYLE YOU LIKE

Place the handle (B) over the 2 mounting studs (A) on the door frame with the set screws (C) pointing down.

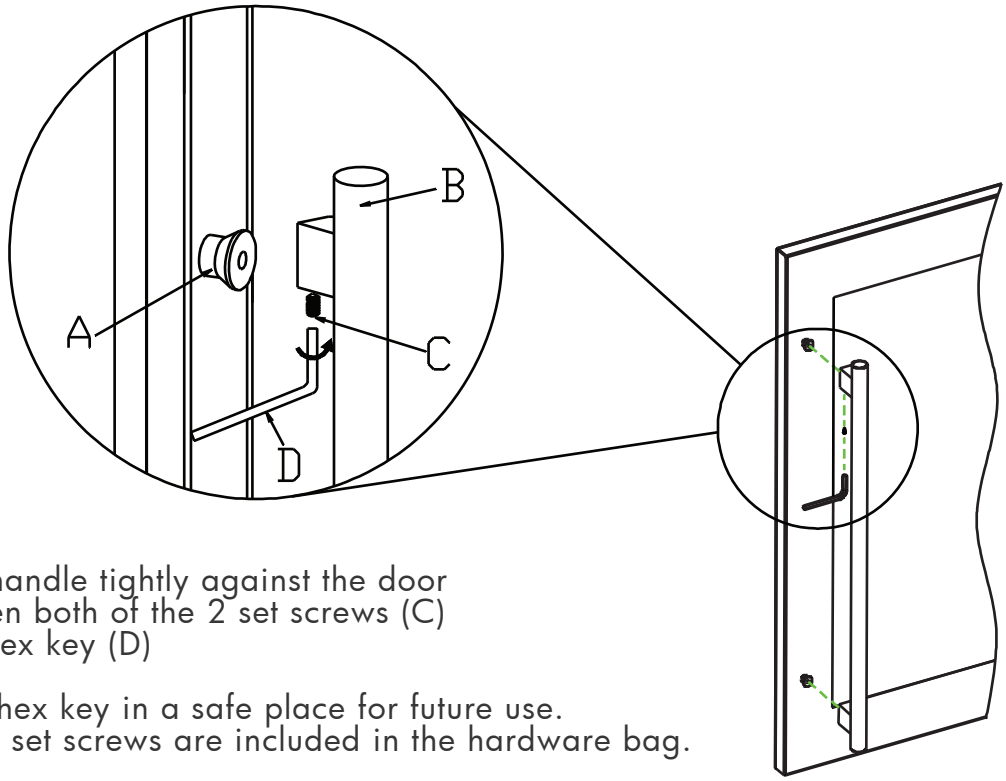

Push the handle tightly against the door and tighten both of the 2 set screws (C) with the hex key (D)

Keep the hex key in a safe place for future use.
Two extra set screws are included in the hardware bag.

Handle Option

Your XO Wine Cellar comes with both the designer stainless bar handle -

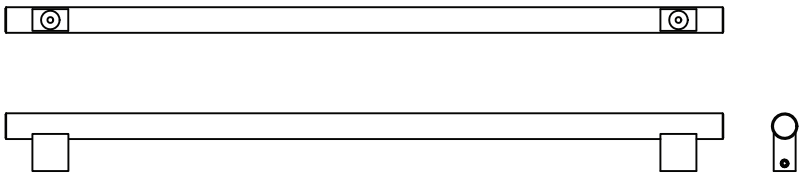

and our PRO Style Handle - you get to choose which style to install

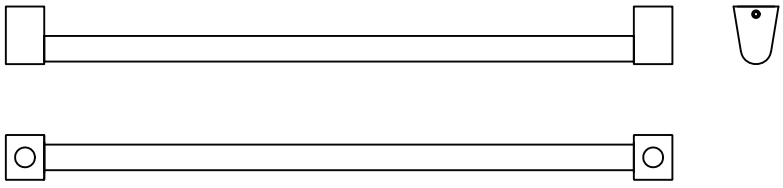

MEET YOUR XO

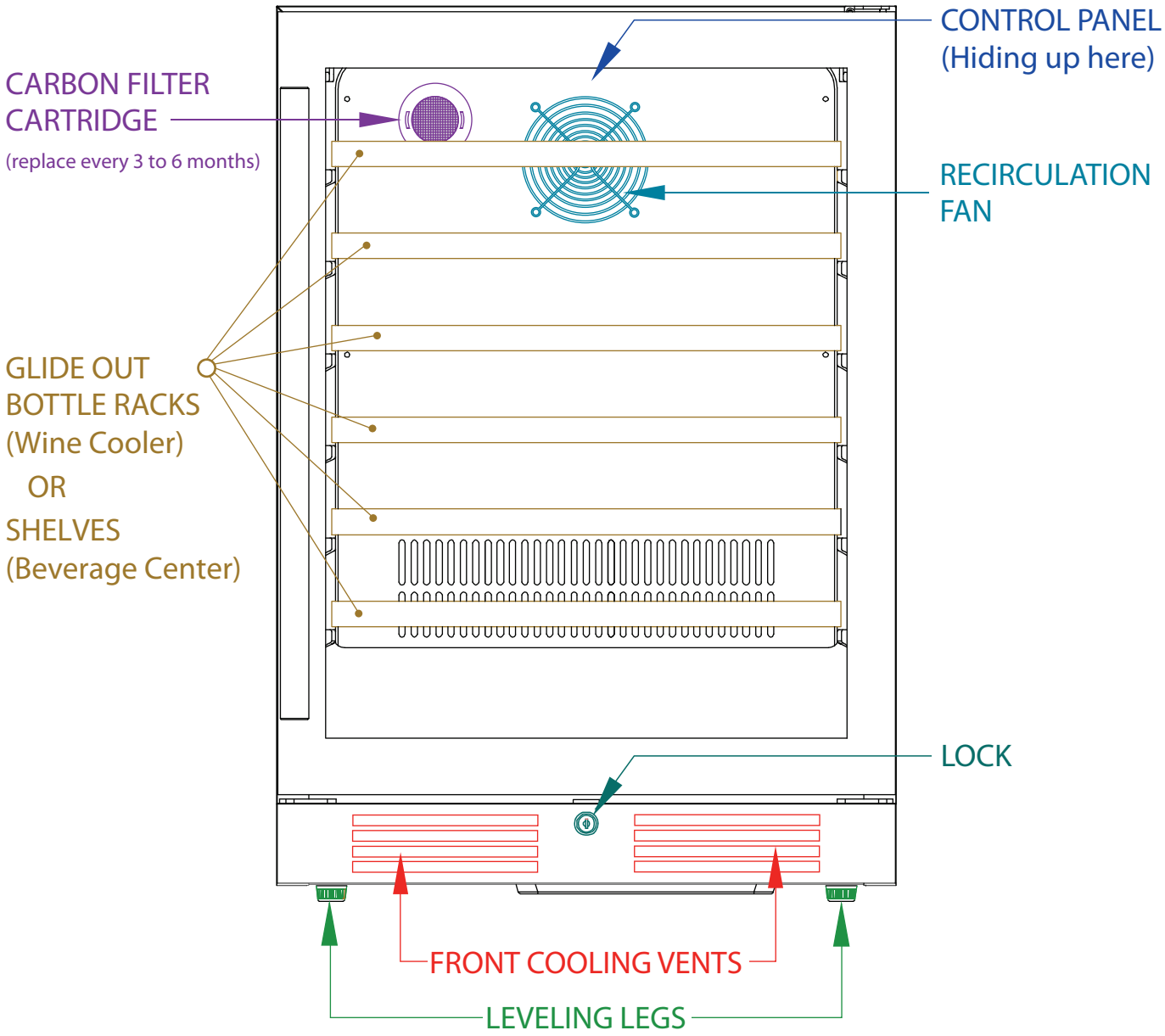
CONTROL PANEL
(Hiding up here)
CARBON FILTER
CARTRIDGE
(replace every 3 to 6 months)
RECIRCULATION
FAN
GLIDE OUT
BOTTLE RACKS
(Wine Cooler)
OR
SHELVES
(Beverage Center)
LOCK
FRONT COOLING VENTS
LEVELING LEGS

TAKE CONTROL

TEMPERATURE

Single Zone Wine Coolers and Beverage Centers have identical control panels.

Single Zone Wine Cooler Temp. Settings	Beverage Center Temp. Settings
Factory Preset: 54°F (Ideal Storage) Adjustable Range: 41°F to 64°F	Factory Preset: 43°F Adjustable Range: 34°F to 50°F

Your Wine Cooler or Beverage Center remembers your temperature setting in case of a power failure and automatically adjusts to the previous setting when power is restored.

When the +/- button is pressed, your wine cellar automatically enters set up mode. The LED Display will begin flashing and display the temperature setting.

Each time you press the + button, the temperature setting will increase 1 Degree.
Each time you press the - button, the temperature setting will decrease 1 Degree.

Once you have reached the desired temperature setting, the display will continue to flash for 5 seconds, then revert to showing the compartment temperature.

To view the real time temperature, press and hold the +/- button for 5 seconds. The interior temperature will flash in the LED Display for 5 seconds.

If you wish to change the display from Fahrenheit to Celsius (or vice versa) press and hold both "+" and "-" simultaneously for 5 seconds.

LED LIGHTS

L1: When you turn on your wine cellar, the internal light will switch on when the door is opened, and off when the door is closed.

L2: Press , the internal light will remain on continuously and dim after 3 minutes.

L3: Press twice, the internal light will remain on for 10 minutes and then shut off.

TAKE CONTROL

CONTINUED

COLORS!

When you turn your wine cellar or beverage center, the interior light is white, press and the light will change to blue.

Press again and the light will change to amber.

SWITCHING MODES

When you turn your XO Unit on, it is set to work in standard mode.
Press ECO mode is turned on. ECO Mode is an energy saver function.
Press again, ECO mode is turned off and it returns to standard mode.

ECO Mode also serves as SABBATH Mode.
The Sabbath Mode was designed for use on the Jewish Sabbath and Holidays.
The Sabbath Mode feature makes it possible for observant Jews to use the beverage center during the duration of the holiday. The Sabbath Mode feature can be set to override typical reactions caused by your interaction with the unit. While in the Sabbath Mode, your appliance will still operate. However, it will not respond to your actions.

While in the Sabbath Mode, you may notice the fan running when the door is opened, however, this is not a result of your actions. The compressor and fan will operate at predetermined times.

Press for 5 seconds, DEMO mode is turned on.
Press for 5 seconds again, DEMO mode is turned off and it returns to standard mode.

Your controls are simple and intuitive to operate.

SINGLE ZONE CONTROL

BEVERAGE CENTERS OR 1 ZONE WINE COOLERS

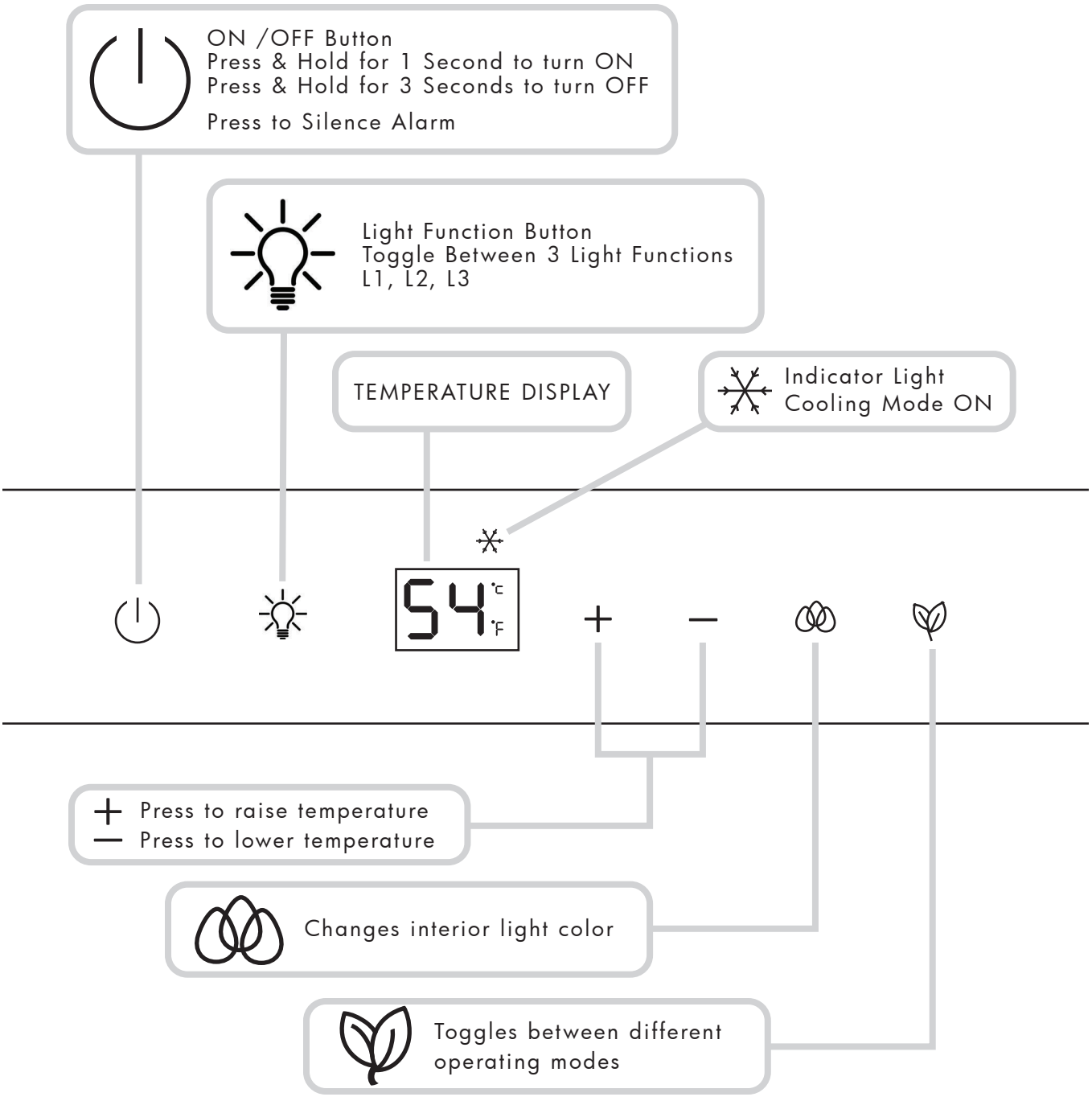

The temperature setting can be adjusted from 41-64°F.
Your controls are simple and intuitive to operate.

54°F is usually ideal for wine storage.

DUAL ZONE CONTROL

2 ZONE WINE COOLERS

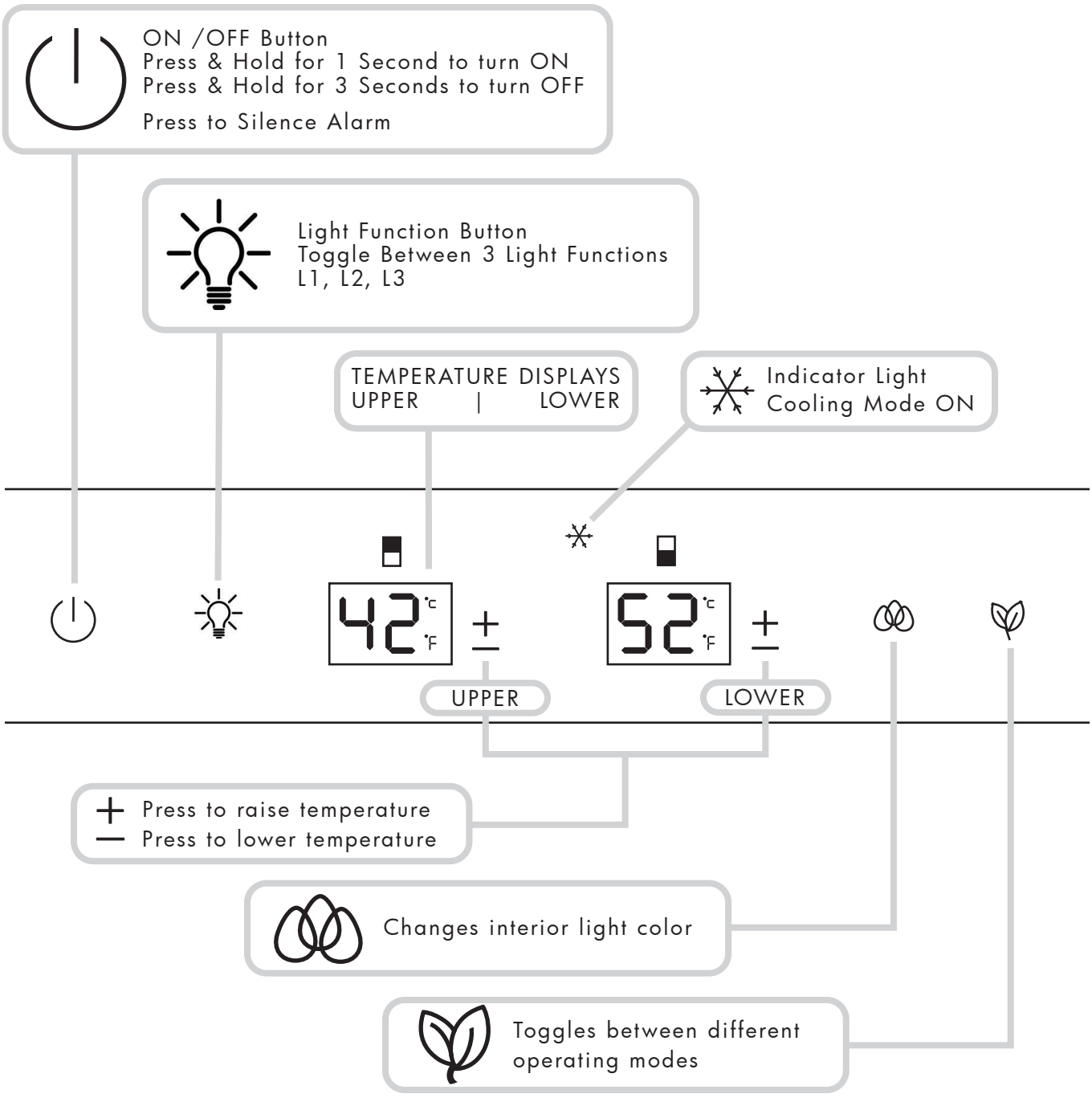

Upper compartment:The temperature setting can be adjusted from 41-50°F.
Lower compartment:The temperature setting can be adjusted from 50-64°F.
Your controls are simple and intuitive to operate.

HOW MANY
WINE BOTTLES CAN THIS HOLD

Wine bottles come in many shapes and sizes.
The following MAXIMUM capacities are based on two of the most popular types in 750 ml.

MODEL	WIDTH	ZONES	BORDEAUX	BURGUNDY
XOU15WGS	15″	1	6 Shelves of 5 + 4	5 Shelves of 3 +3
			34 TOTAL	18 TOTAL

MODEL	WIDTH	ZONES	BORDEAUX	BURGUNDY
XOU24WGS	24″	1	6 Shelves of 8 + 6	6 Shelves of 8 +6
			54 TOTAL	54 TOTAL

MODEL	WIDTH	ZONES	BORDEAUX	BURGUNDY
XOU24WDZGS	24″	2	5 Shelves of 8 + 6	5 Shelves of 8 +6
			46 TOTAL	46 TOTAL

Shelf capacities

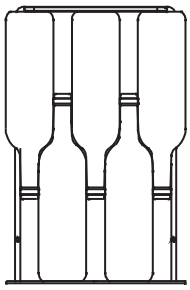

15″ Wide Wine Cellar Shelves
accommodate up to 5 Bottles Each

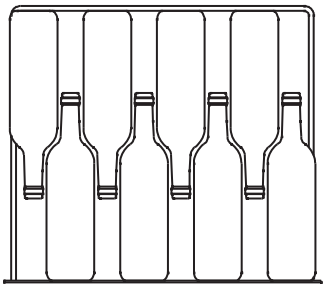

24″ Wide Wine Cellar Shelves
accommodate up to 8 Bottles Each

Store wine in sealed bottles only
Avoid overloading
Storing little or no product can cause excessive condensation

JUGGLING SPACE
IS EASY WITH XO

STEP 1: Remove the shelf

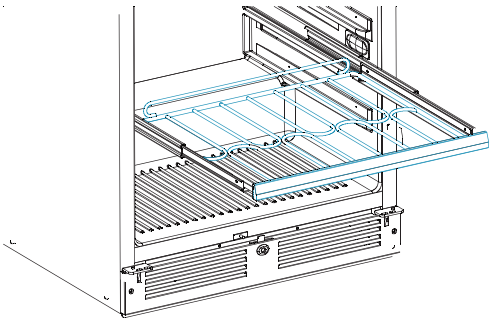

STEP 2: Remove and re-position the shelf glides

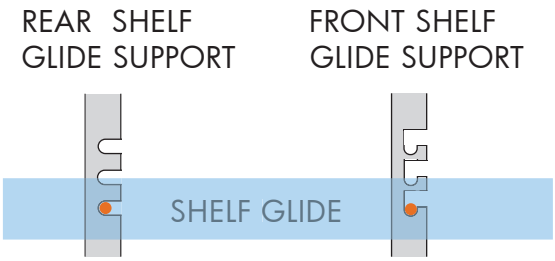

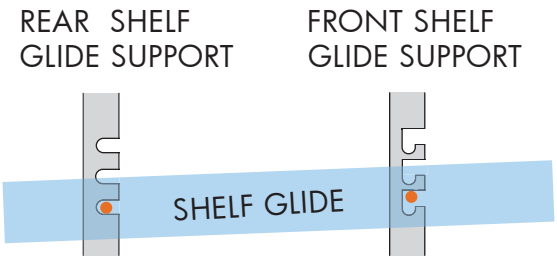

STEP 3: Reverse the steps.

Install the right and left SHELF GLIDES in their new position by pushing the pins into the slots and click the front of the glide down to secure.

Replace the shelf.

ALL SHELVES MUST BE PUSHED ALL THE WAY IN BEFORE CLOSING THE DOOR
DOOR MUST BE FULLY OPENED BEFORE PULLING SHELVES OUT

Easy to change + more shelf positions give you more storage options with XO.

A LITTLE TLC
GOES A LONG WAY

Cleaning the Inside:
Walls, floor, inside window, and shelves - Some water deposits and dust can be removed with a dry paper towel, others may require a damp cloth.

Cleaning the Outside:
Outer case - It is important to keep the area clean where the door seals against the cabinet. Clean this area with a soapy cloth. Rinse with a damp cloth and let dry.

Control Panel and Door - Wipe with a damp cloth and dry thoroughly. Do not use cleaning sprays, large amounts of soap and water, abrasive, or sharp objects on the panel, they can damage it.
CAUTION: Some paper towels may also scratch the control panel and glass on the door.

Door Surface - Use only mild, non-abrasive detergents applied with a clean sponge or soft cloth.
Rinse well with damp cloth.
NOTE: Do not use cleaners containing ammonia or alcohol on your XO unit. Ammonia or alcohol can damage the appearance of the appliance.
NOTE: Never use any commercial/abrasive cleaners or sharp objects on any part of the wine cooler.

POWER FAILURE

Most power failures are corrected within a few hours and should not affect the temperature of your appliance if you minimize the number of times the door is opened.
If the power is off for a longer period of time, you need to take the proper steps to protect your contents.

VACATION

Short vacations: Leave the XO unit operating during vacations of less than three (3) weeks.
Long vacations: If the appliance will not be used for an extended period, remove all items and turn off the appliance.
Clean and dry the interior thoroughly. To prevent odor and mold growth, leave the door open slightly, blocking it open if necessary.

ENERGY SAVING TIP
The unit should be located in the coolest area of the room, away from heat producing appliances, and out of direct sunlight.

MOVING

Remove all items and securely tape down all loose items (shelves) inside your appliance
Turn the adjustable leveling legs all the way into the base to avoid damage
Tape the door shut and transport the XO unit securely in the upright position
Blanket wrap the exterior to help protect against scratches and other damage

A BREATHE OF FRESH AIR

FOR BEST RESULTS CHANGE EVERY 3 TO 6 MONTHS

Your Air Refresh
Charcoal Filter
Is Located Here

P/N: XOUAIRFILTER

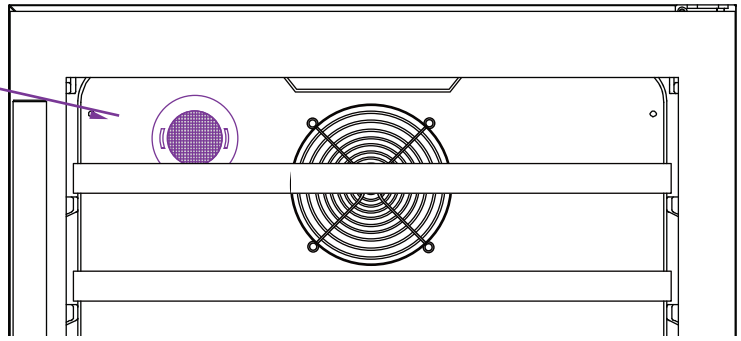

Rotate the filter 1/4 turn
to unlock

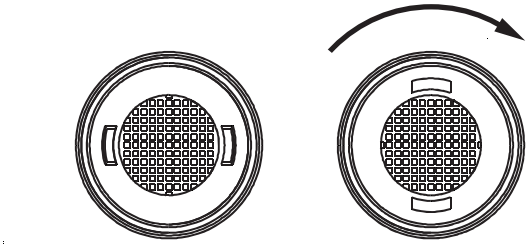

Pull straight out to remove

Align the tabs and
insert the new filter

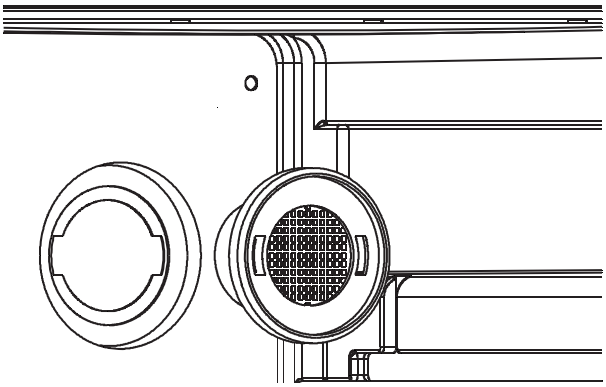

Rotate filter 1/4 turn
to lock in place

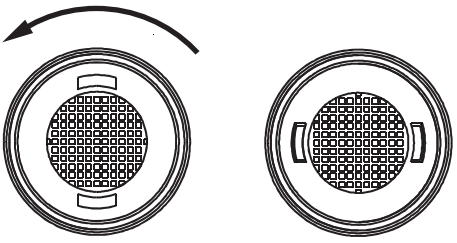

FAQs

Q. There doesn't appear to be any power to the unit.
A. There are 3 easy to check common causes:
(1) Check to see if a fuse has blown or circuit breaker has tripped & replace or reset.
(2) Check to ensure the plug is fully inserted into the outlet.
(3) A power surge may have caused the unit to shut down to protect itself - Unplug the unit, wait 5 seconds and plug it back in.

Q. The cabinet temperature is too high.
A. Check these 5 things:
(1) Check the temperature setting and adjust as needed.
(2) Make certain the door is completely closed and the door gasket is sealing properly.
(3) Avoid opening the door frequently and/or leaving the door open for extended periods.
(4) Did you load a large quantity of warm bottles at once? It is better to add smaller quantities in several loads.
(5) Make certain nothing is blocking the toe kick vents (including dust behind the vents).

Q. The alarm is beeping and "HI" is displayed on the control panel.
A. See the question and answers above - if the door has been tightly closed and you have not recently added a large quantity of warm bottles, it may be a mechanical issue. Unplug the unit and call for service.

Q. The alarm is beeping and "LO" is displayed on the control panel.
A. This may be a sensor malfunction. Unplug the unit and call for service.

MORE "Q & A"

Q. Why does condensation form on the inside or outside of my XO unit?
A. It may be that the door is either opened repeatedly or not closed completely. It may also be due to an excessive ambient humidity, in which case it will clear when the humidity drops.

Q. There is warm air coming from the bottom of my unit.
A. This is normal. Cooling systems must vent the heat they remove from inside the cabinet.

Q. Why does the evaporator fan run all the time?
A. It continually recirculates air to ensure cabinet temperatures are consistent.

Q. How do I adjust temperature?
A. Refer to Pages 7 & 10.

Q. How do I adjust shelf height?
A. Refer to Page 12.

Q. When does the high temperature alarm sound?
A. If internal temperature exceeds 70°F for more than 60 minutes.

Q. If the door hinge is next to a wall, how much clearance do I need to open the door?
A. The unit should be at least 2" from the wall to allow the door to open at least 90°.

WE'VE GOT YOUR BACK

90 DAY LOVE IT or LEAVE IT. For 90 Days all our products are backed by our unique Love it or Leave it Guarantee.
TWO-YEAR PARTS & LABOR LIMITED WARRANTY. XO warrants to the original purchaser of every new XO refrigerated unit, the cabinet and all parts thereof, to be free from defects in material or workmanship under normal and proper use and maintenance as specified by XO and upon proper installation and start-up in accordance with the instruction packet supplied with each XO unit. XO's obligation under this warranty is limited to a period of two (2) years from the date of original purchase.
FIVE-YEAR COMPRESSOR LIMITED WARRANTY. XO warrants its compressor to be free from defects in both material and workmanship under normal and proper use and maintenance service for a period of five (5) years from the date of original purchase. If the compressor fails during that time period due to a defect in material or workmanship, XO will supply a replacement compressor free of charge. The consumer will be responsible for all related transporation and labor costs. Product must be registered with XO to qualify for this warranty.
TERMS APPLICABLE TO EACH WARRANTY. Any part covered under the above warranties that is determined by XO to have been defective within the time frame is limited to the repair or replacement, including labor charges, of defective parts or assemblies. The labor warranty shall include standard straight time labor charges only and reasonable travel time, as determined by XO.
WARRANTY CLAIMS. All claims for labor or parts must be made directly through XO. All claims should include: model number and serial number of cabinet, proof of purchase, and date of installation. In case of warranted compressor, the compressor model tag must be returned to XO along with the above listed information.
WHAT IS NOT COVERED BY THIS WARRANTY. XO's sole obligation under this warranty is limited to either repair or replacement of parts, subject to the additional limitations below. This warranty neither assumes nor authorizes any person to assume obligations other than those expressly covered by this warranty. Open box, factory seconds, scratch and dent, floor models and commercial applications are excluded from these warranties. Consumer shall be responsible for labor and transportation costs where noted above.
NO CONSEQUENTIAL DAMAGES. XO is not responsible for economic loss, profit loss; or special, indirect or consequential damages, including without limitation, losses or damages arising from food or product spoilage claims whether or not on account or refrigeration failure.
WARRANTY IS NOT TRANSFERABLE. This warranty is not assignable and applies only in favor of the original purchaser/user at the original installation location. Any such assignment or transfer shall void the warranties herein made and shall void all warranties, express or implied, including any warranty or merchantability or fitness for a particular purpose.
IMPROPER USAGE. XO assumes no liability for parts or labor coverage for component failure or other damages resulting from improper usage or installation or failure to clean and/or maintain product as set forth in the warranty packet provided with the unit.
ALTERATION OR NEGLECT. XO is not responsible for the repair or replacement of any parts that XO determines have been subjected after the date of manufacture to alteration, neglect, abuse, misuse, accident, damage during transit or installation, fire, flood, or act of God.
IMPROPER ELECTRICAL CONNECTIONS. XO is not responsible for the repair or replacement of failed or damaged components resulting from electrical power failure, high or low voltage, use of extension cords, or improper grounding of the unit.
YOUR RIGHTS UNDER STATE LAW. This warranty gives you specific legal rights and you may have other rights that vary from state to state. Some states do not allow the exclusion or limitation of consequential damages or a limitation on how long an implied warranty lasts, so the above exclusion or limitation may not apply to you.
OUTSIDE U.S. This warranty does not apply to, and XO is not responsible for, any warranty claims made on products sold or used outside the 48 continental United States.

To obtain service:

Call 973-403-8900 | email service@xoappliance.com | or submit a request on our website www.xoappliance.com

XO

UNDERCOUNTER

When buying any XO appliance

you can be confident you have chosen a

high quality, innovative and stylish product

from a company that cares about you!

If you require service

or have questions,

Help is only a phone call away -

call: 973-403-8900

Talk to one of our undercounter experts.