dacor®

User Manual

Downdraft Vent

HRV46, MRV3015S, MRV3615S, MRV48S,
MRV3015-ERS, MRV36-ERS, MRV48-ERS

Height and style varies (MRV36-ERS shown)

Table of Contents

Important Safety Instructions 1
Operating Your Downdraft Vent 3
Care and Cleaning 4
Troubleshooting..... 5
Warranty..... 6
Warranty Card ..... Back Cover

Part No. 113911 Rev C

To Our Valued Customer:

Congratulations on your purchase of this very latest in Dacor® products! Our unique combination of features, style, and performance will prove a tremendous asset to your home.

To familiarize yourself with the controls, functions, and full potential of your new Dacor downdraft vent, read this manual thoroughly, beginning with **Important Safety Instructions** (Pg. 1).

Dacor appliances are designed and manufactured with quality and pride, while working within the framework of our company value. Should you ever experience an issue with your vent, first check **Troubleshooting** (Pg. 3) for useful suggestions and remedies that may pre-empt a call for service.

Valuable customer input helps us continually improve our products and services, so feel free to contact our Customer Assurance Team for assistance with any of your product-services needs.

Dacor Customer Assurance
14425 Clark Avenue
City of Industry, CA 91745

Telephone	833-35-ELITE (833-353-5483) USA, Canada
Fax	(626) 403-3130
Hours of Operation	Mon – Fri, 5:00 a.m. to 5:00 p.m. Pacific Time
Website	www.dacor.com/customer-care/contact-us

Thank you for choosing Dacor for your home. We are a company built by families for families, and we are dedicated to serving yours. We are confident your new Dacor vent will deliver a high level of performance and enjoyment for many years to come.

Sincerely,
The Dacor Customer Assurance Team

© 2018 Dacor, all rights reserved.

Important Safety Instructions

INSTALLER: Leave these instructions with the owner.

CUSTOMER: Read this and the cooking-unit user manual before using either appliance. Save all manuals for reference.

For warranty information, see Pg. 4.

If you have any questions, call:

Dacor Customer Assurance
833-35-ELITE (833-353-5483) USA, Canada
Mon – Fri 5:00 A.M. to 5:00 P.M. Pacific Time
Website: www.dacor.com/customer-care/contact-us

Have available the vent's model/serial numbers (see the data label – front of the vent). Write the numbers here:

Model number _____

Serial number _____

Date of purchase _____

About Safety Instructions

The ***Important Safety Instructions*** and warnings in this manual cannot address every possible issue. Use wisdom and caution when maintaining/operating the vent.

Safety Symbols and Labels

⚠ DANGER

Immediate hazards that **WILL** cause severe injury or death.

⚠ WARNING

Hazards/unsafe actions that **MAY** cause severe injury or death.

⚠ CAUTION

Hazards/unsafe actions that **MAY** cause minor injury or property damage.

⚠ WARNING

- Always run the downdraft vent when using the range.
- Do not let the filters become clogged or foreign objects be sucked into vents.

IN CASE OF A GREASE FIRE:

- SMOTHER FLAMES with a close-fitting lid, cookie sheet, or metal tray, then turn off the burner. If the flames do not go out immediately, EVACUATE, AND CALL THE FIRE DEPARTMENT.
- NEVER PICK UP A FLAMING PAN.
- DO NOT TRY TO EXTINGUISH THE FIRE WITH WATER, including wet dish towels.
- Use a fire extinguisher ONLY if:
  - you have a Class ABC extinguisher and know how to use it.
  - the fire is small and contained in the area of origin.
  - the fire department is being called.
  - you can fight the fire with your back to an exit.

California Proposition 65 Warnings:
This unit contains one or more chemicals known to the State of California to cause cancer and birth defects or other reproductive harm.

General Precautions

To reduce risk of fire, electric shock, and serious injury or death when operating the vent, use common sense, and follow basic safety precautions, including:

⚠ WARNING

- Use the downdraft vent only as this manual directs. Do not vent hazardous/explosive substances.
- Keep all packaging away from children.
- Do not leave children/pets unattended near an active cooking unit. Do not let children sit/stand/play on the vent and cooking unit.
- Do not store items of interest to children above/on/near cooking unit.
- Only persons with sufficient knowledge should operate the downdraft vent.
- The vent has a 3-prong grounding plug to prevent electric shock. Insert the plug only in a dedicated, grounded outlet. If no such outlet is available, the owner shall have one installed by a qualified electrician. Do NOT:
  - remove the cord's third (ground) prong.
  - use an adapter plug.
  - use an extension cord.
  - use a damaged power cord.
  - use a ground fault interrupter (GFI).
- Service/operate the unit only as instructed in this manual. A qualified technician should perform all other service.
- Unplug the unit before cleaning or service.
- Do not tamper with the controls.
- DO NOT TOUCH THE DOWNDRAFT VENT DURING OR IMMEDIATELY AFTER USE.
- Never operate the vent without the filters in place.
- Turn pan handles to the side before raising the vent.
- Do not hinder vent-intake movement.
- Clean spills immediately. If liquid enters the vent intake, turn off the blower, unplug the unit, and wipe up all liquid. (See Care and Cleaning.)
- Do not use a sharp tool to remove heavy spills.
- Do not let acids (ex: citrus, tomato) remain on the unit's surfaces.
- If the vent intake jams, quickly press the power button, then unplug the vent. Remove the obstruction, plug the vent in, and press the power button to resume.

Operating Your Downdraft Vent

Operation

IMPORTANT

The direction of travel of the vent intake cannot be reversed while it is moving. The intake must complete a full up or down cycle before changing directions.

- To raise the vent, press the button on the top cap. The intake takes about 10 seconds to raise fully.
- Once up, the blower turns on at the speed at which was set when the intake was last lowered. Adjust blower speed by turning the variable speed control.
- Turn the blower off by pressing the button on the top cap. The blower turns off, and the intake lowers fully.

Operating Tips

- Turn on the downdraft vent a few minutes before cooking to establish airflow in the room.
- Adjust fan speed to the volume of the cooking exhaust.
- Always operate the vent when using the cooktop.
- Reduce fan speed if the vent pulls at the cooktop flame.(This is normal with powerful vent systems, especially those with short duct runs.)
- Eliminate nearby air currents by shutting windows and doors, turning off ceiling fans, and closing adjacent heating/air-conditioning outlets.
- Place the largest cookware on the rear burners if possible, as the draft is strongest next to the intake.

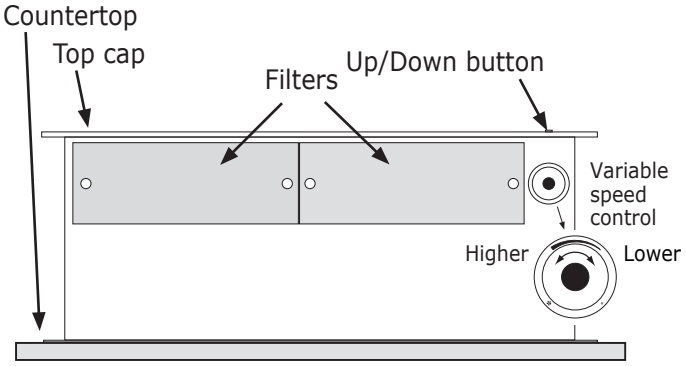

Parts the of Downdraft Vent - Shown Raised

Care and Cleaning

WARNING

- Clean the vent only as specified.
- Use only the cleaning solutions listed in this manual.
- Before cleaning, turn off the range and vent, and wait for all surfaces to cool.
- Wipe stainless steel with the grain. Do not use abrasive cleaners or scrubbers.
- To avoid fan damage, do not reinstall damaged filters.
- Do not clean the filters in a dishwasher.

Cleaning the Top Cap

Clean the top cap when the vent is down.

Gently wipe the cap with a sponge or soft cloth moistened with a mild detergent-water solution. Keep moisture away from the On/Off button.

Cleaning the Filters

Clean the filters regularly to prevent grease buildup.

1. Raise the vent.
2. Gently grasp each filter on both sides, and push down.
3. Pull the top of each filter out and lift away from the vent.
4. Wipe surrounding areas (inside and out), with a sponge or cloth moistened with a mild detergent. Rinse these surfaces with water. Wipe dry with a soft, dry cloth.
5. Hand-wash the filters in hot water with mild-detergent solution.
6. Dry the filters completely, then re-install them.

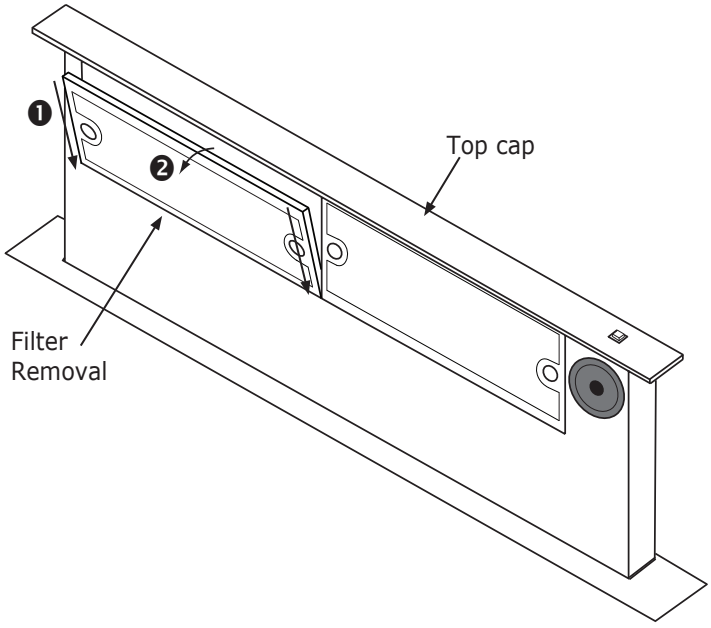

Troubleshooting

PROBLEM	MAY BE CAUSED BY	WHAT TO DO
Nothing works.	Downdraft vent not connected to electrical power.	Plug in unit.
	Power to vent outlet is off.	Check for tripped breaker or blown fuse.
	Power outage.	Contact power company.
Vent intake raises/lowers partially, then stops.	Something impedes vent-intake movement.	Immediately press Up/Down switch, then unplug unit, and remove obstruction; plug in unit, and press Up/Down switch to resume.
Gas flame is pulled by vent draft.	Short duct run or high system output cause forceful ventilation.	Reduce blower speed to a lower setting.

Warranty

What Is Covered

CERTIFICATE OF WARRANTIES: DACOR DOWNDRAFT VENTS

WITHIN THE FIFTY STATES OF THE U.S.A., THE DISTRICT OF COLUMBIA, AND CANADA*:

FULL 2-YEAR WARRANTY

The warranty applies only to the Dacor Modernist appli-ance sold to the first-use purchaser, starting from the date of original retail purchase or closing date for new construction, whichever period is longer. Warranty is valid on Modernist products purchased brand new from a Dacor Authorized Dealer or other seller authorized by Dacor.

If your Dacor Modernist product fails to function within one year of the original date of purchase, due to a defect in material or workmanship, Dacor will remedy it without charge to you.

All cosmetic damage (e.g., scratches on stainless steel, paint/porcelain blemishes) to the unit or included acces-sories must be reported to Dacor within 60 days of the original purchase date to qualify for warranty coverage.

Consumable parts such as filters and light bulbs are not covered and are the responsibility of the purchaser.

LIMITATIONS OF COVERAGE

Service will be provided by a Dacor-designated during regular business hours. Service providers are not agents of Dacor.

Dealer display and model-home display products with a production date greater than 5 years, products sold "As Is," and products installed for non-residential use (includ-ing but not limited to religious organizations, fire stations, bed and breakfast, spas) carry a 1-year parts warranty only. All delivery, installation, labor costs and other ser-vice fees are the responsibility of the purchaser.

Warranty will be null and void on product that has altered, defaced or missing serial numbers and tags.

The owner must provide proof of purchase or closing statement for new construction upon request. All Dacor products must be accessible for service.
Warranty is null and void if non-ETL or non-CUL approved product is transported from the U.S.A.

OUTSIDE THE FIFTY STATES OF THE U.S.A., THE DISTRICT OF COLUMBIA, AND CANADA:

LIMITED FIRST-YEAR WARRANTY

If your Dacor Modernist product fails to function within 1 year of the original date of purchase due to a defect in material or workmanship, Dacor will furnish a new part, F.O.B. factory to replace the defective part.
All delivery, installation, labor costs and other service fees are the responsibility of the purchaser.

What Is Not Covered

- Slight color variations due to differences in painted parts, ambient light, unit location, etc.
- Service calls to educate the customer on proper use and care of the unit.
- Service fees for travel to islands and remote areas, (including but not limited to: ferries, toll roads).
- Consequential or incidental damage (including but not limited to food or medicine loss, lost worktime, restau-rant meals).
- Product malfunction when used for commercial, busi-ness, rental, or any purpose other than residential use.
- Product malfunction due to improper installation.
- Replacement of house fuses, fuse boxes, or resetting circuit breakers.
- Product damage from accident, fire, flood, power inter-ruption, power surges, or so-called acts of God.
- Liability or responsibility for damage to surrounding property including cabinetry, floors, ceilings, and other structures or objects.
- Breakage, discoloration, or damage to glass, metal sur-faces, plastic components, trim, paint or other cosmetic finish caused by improper usage, care, abuse or neglect.

Out of Warranty

Should you experience a service issue beyond the stan-dard warranty period, please contact us. Dacor reviews each issue and customer concern to provide the best pos-sible solution based on the circumstances.

THE REMEDIES PROVIDED IN THE ABOVE EXPRESS WARRANTIES ARE THE SOLE AND EXCLUSIVE REMEDIES. THEREFORE, NO OTHER EXPRESS WARRANTIES ARE MADE, AND OUTSIDE THE FIFTY STATES OF THE UNITED STATES, THE DISTRICT OF COLUMBIA AND CANADA, ALL IMPLIED WARRANTIES, INCLUDING BUT NOT LIMITED TO, ANY IMPLIED WARRANTY OF MERCHANTABILITY OR FITNESS FOR A PARTICULAR USE OR PURPOSE, ARE LIMITED IN DURATION TO ONE YEAR FROM THE DATE OF ORIGINAL PURCHASE . IN NO EVENT SHALL DACOR BE LIABLE FOR INCIDENTAL EXPENSE OR CONSEQUENTIAL DAMAGES. IN THE EVENT DACOR PREVAILS IN ANY LAWSUIT, DACOR SHALL BE ENTITLED TO REIMBURSEMENT OF ALL COSTS AND EXPENSES, INCLUDING ATTORNEY'S FEES, FROM THE DACOR CUSTOMER . NO WARRANTIES, EXPRESS OR IMPLIED, ARE MADE TO ANY BUYER FOR RESALE.

Some states do not allow limitations on how long an implied warranty lasts, or do not allow the exclusion or limitation of inconsequential damages, therefore the above limitations or exclusions may not apply to you. This warranty gives you specific legal rights, and you may also have other rights that vary from state to state.

fold here

NO POSTAGE
NECESSARY
IF MAILED
IN THE
UNITED STATES

BUSINESS REPLY MAIL
FIRST-CLASS MAIL PERMIT NO 1600 CITY OF INDUSTRY CA

POSTAGE WILL BE PAID BY ADDRESSEE

DACOR
ATTN WARRANTY PROCESSING DEPT
PO BOX 90070
CITY OF INDUSTRY CA 91715-9907

dacor
LET THE SHOW BEGIN

Please visit **www.dacor.com** to activate your warranty online.

WARRANTY INFORMATION

IMPORTANT:
Your warranty will not be activated until you activate it online or return this form to Dacor. If you have purchased more than one Dacor product, please return all forms in one envelope, or activate the warranty online for each product.

Please be assured that Dacor will never sell your name or any information on this form for mailing-list purposes, as we do not consider it a proper way of expressing our gratitude for your having chosen Dacor products for your kitchen!

Owner Last Name (please print) _____ First _____ Middle Init. _____

Street _____

City _____ State _____ Zip _____

Purchase Date _____ Email _____ Phone _____

Dealer _____

City _____ State _____ Zip _____

Your willingness to take a few seconds to complete the section below will be sincerely appreciated. Thank you.

1. How were you first exposed to Dacor products? (Please check one.)
   - ☐ A. T.V. Cooking Show
   - ☐ B. Magazine
   - ☐ C. Appliance Dealer Showroom
   - ☐ D. Kitchen Dealer Showroom
   - ☐ E. Home Show
   - ☐ F Builder
   - ☐ G. Architect/Designer
   - ☐ H. Another Dacor Owner
   - ☐ I. Model Home
   - ☐ J. Other _____
2. Where did you buy your Dacor appliances?
   - ☐ A. Appliance Dealer
   - ☐ B. Kitchen Dealer
   - ☐ C. Builder Supplier
   - ☐ D. Builder
   - ☐ E. Other _____
3. For what purpose was the product purchased?
   - ☐ A. Replacement only
   - ☐ B. Part of a Remodel
   - ☐ C. New Home
   - ☐ D. Other _____
4. What is your household income?
   - ☐ A. Under $75,000
   - ☐ B. $75,000 – $100,000
   - ☐ C. $100,000 – $150,000
   - ☐ D. $150,000 – $200,000
   - ☐ E. $200,000 – $250,000
   - ☐ F. Over $250,000
5. What other brands of appliances do you have in your kitchen?

   A. Cooktop _____ C. Dishwasher _____

   B. Oven _____ D. Refrigerator _____
6. Would you buy or recommend another Dacor product?
   - ☐ Yes
   - ☐ No

   Comments _____

Thank you very much for your assistance. The information you have provided will be extremely valuable in helping us plan for the future and in giving you the support you deserve.

cut here

cut here

Website: www.dacor.com/customer-care/contact-us **Customer Assurance:** 833-353-5483