ELECTRIC DRYER

MODELS:

WED5620HW1 (White)

09/17/2019
© 2019 Whirlpool Corporation
Part No. W11338066 Rev. A

TOP AND CONSOLE PARTS

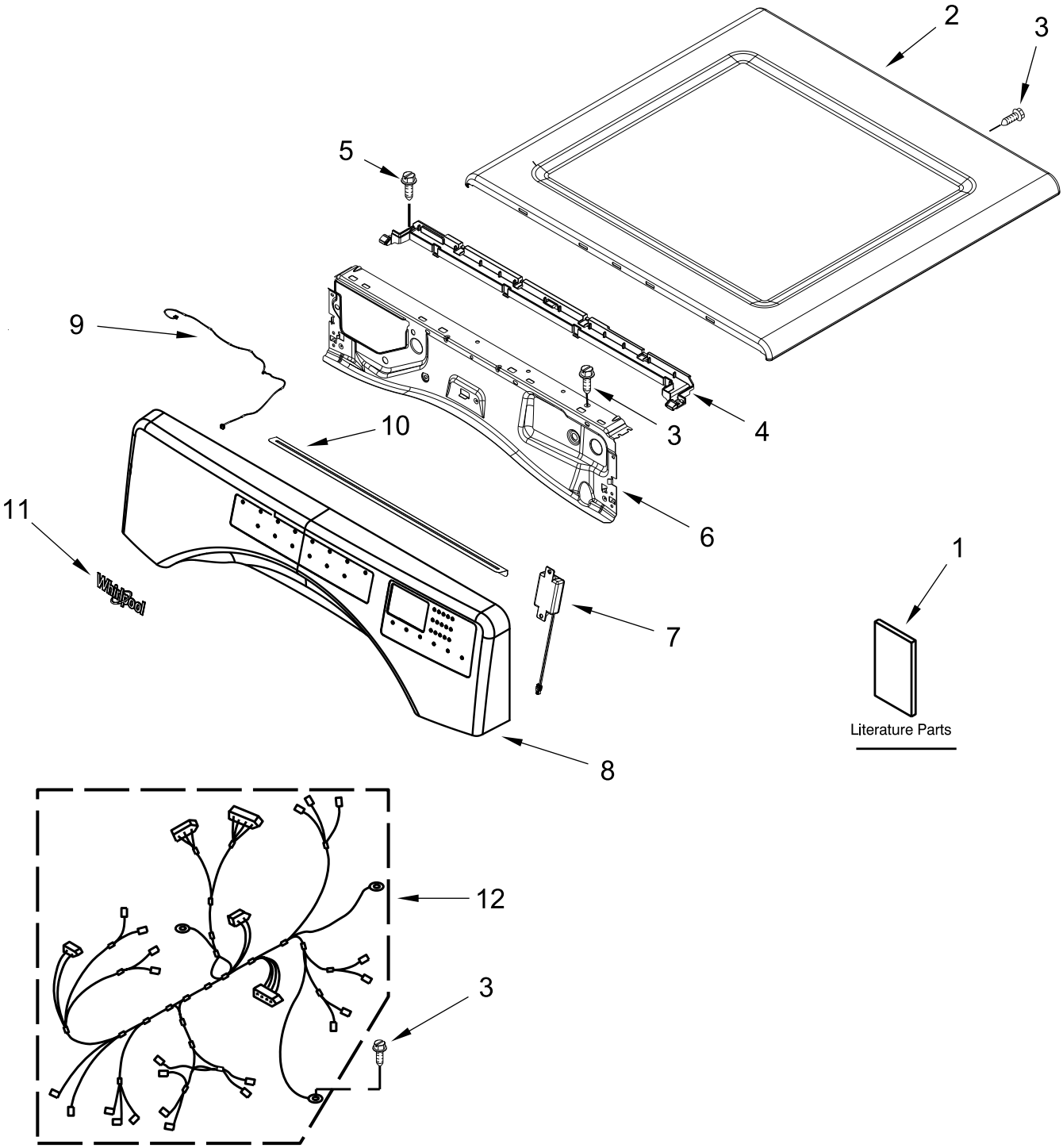

TOP AND CONSOLE PARTS

Illus. No.	Part No.	Description
1		Literature Parts
	W11184586	Use and Care Guide
	W11183136	Installation Instructions
	W11184899	Tech Sheet
	W11241395	Wiring Diagram
	W11184895	Quick Start Guide
2		Top
	W10208383	White
3	3390647	Screw
4	W11255768	Channel, Water
5	12990702	Screw
6	W10208198	Bracket, Console
7	W10568405	Assembly, Speaker
8		Assembly, Console
	W11314470	White
9	W11160620	Harness, User Interface
10	W11231800	Seal
11	W10884773	Badge
12	W11109747	Harness, Wiring (Main)

CABINET PARTS

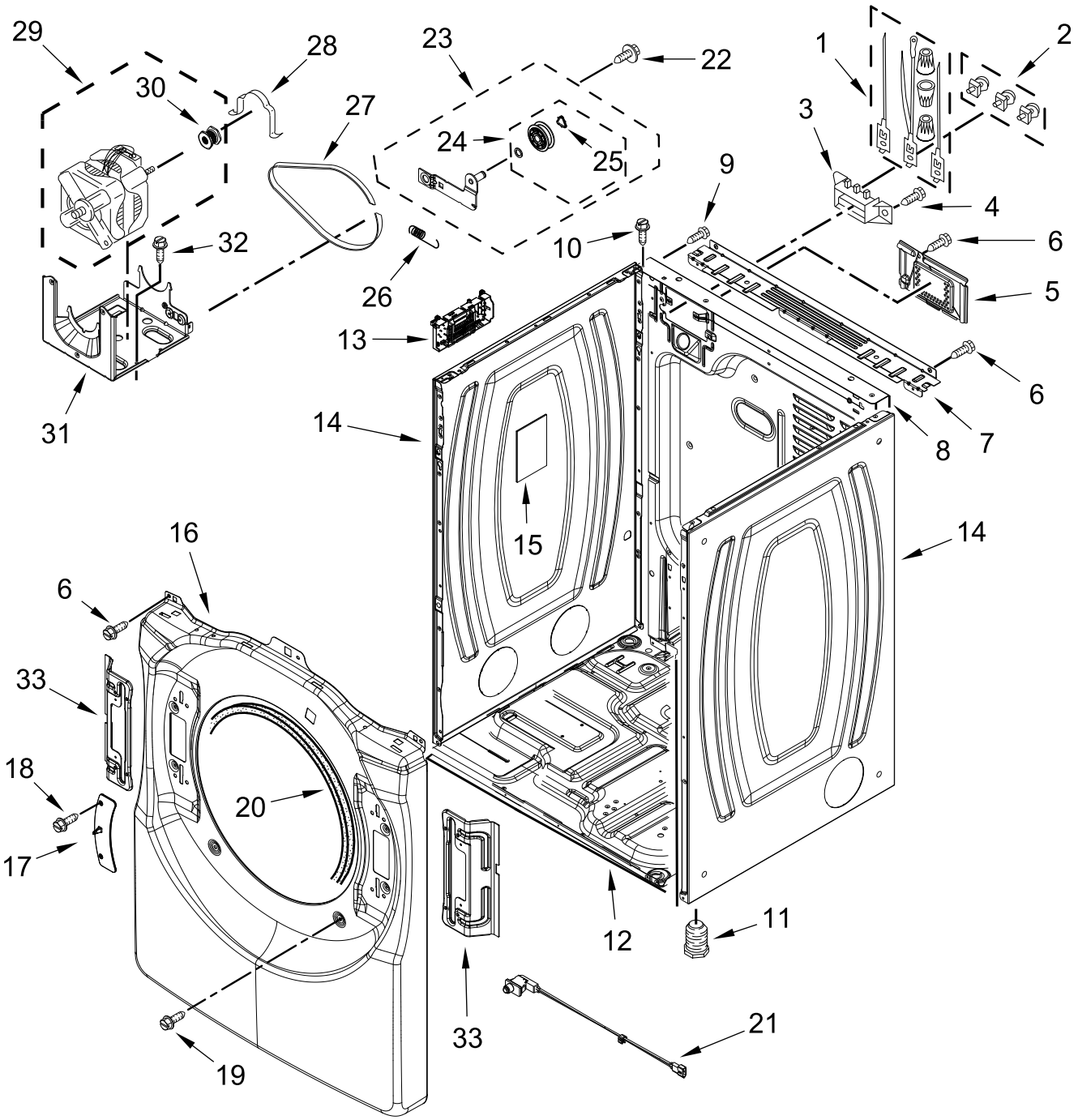

CABINET PARTS

Illus. No.	Part No.	Description
1	279318	Terminal, Brass and Tinned (Includes Terminal Block Screw Kit)
2	279393	Screw Kit, Terminal Block
3	3397659	Block, Terminal
4	489463	Screw
5	W10316167	Cover, Terminal Block
6	3390647	Screw
7	W10208382	Bracket, Rear
8	W10487431	Panel, Rear
9	W10773242	Screw
10	3393008	Screw
11	3392100	Foot, Dryer
	279810	Foot, Optional (Extended Length Package Of 2) (Not Included)
12	8565046	Base, Cabinet
13	W11385395	Appliance Control Unit (ACU)
14		Panel, Side
	W11177568	White
15	W10504381	Pad, Foam
16		Panel, Front
	W11045946	White
17	W11126752	Strike, Door
18	W10288126	Screw
19	3357011	Screw
20	3387242	Seal, Front Panel
21	W10569114	Door Switch, Snap In
22	3389420	Screw
23	W10547287	Assembly, Idler
24	W10468057	Assembly, Pulley
25	W10512946	Washer, Tri Ring
26	W10446781	Spring, Idler
27	3387610	Belt, Drive
28	W10121316	Clamp, Motor Mount
29	W10806758	Assembly, Motor
30	8066184	Pulley, Motor
31	W10242878	Bracket, Motor Mounting
32	343641	Screw
33	W11084215	Bracket, Hinge
		DRYER EXHAUST KIT NOT INCLUDED
	W10323246	Kit, 4-Way Vent

BULKHEAD PARTS

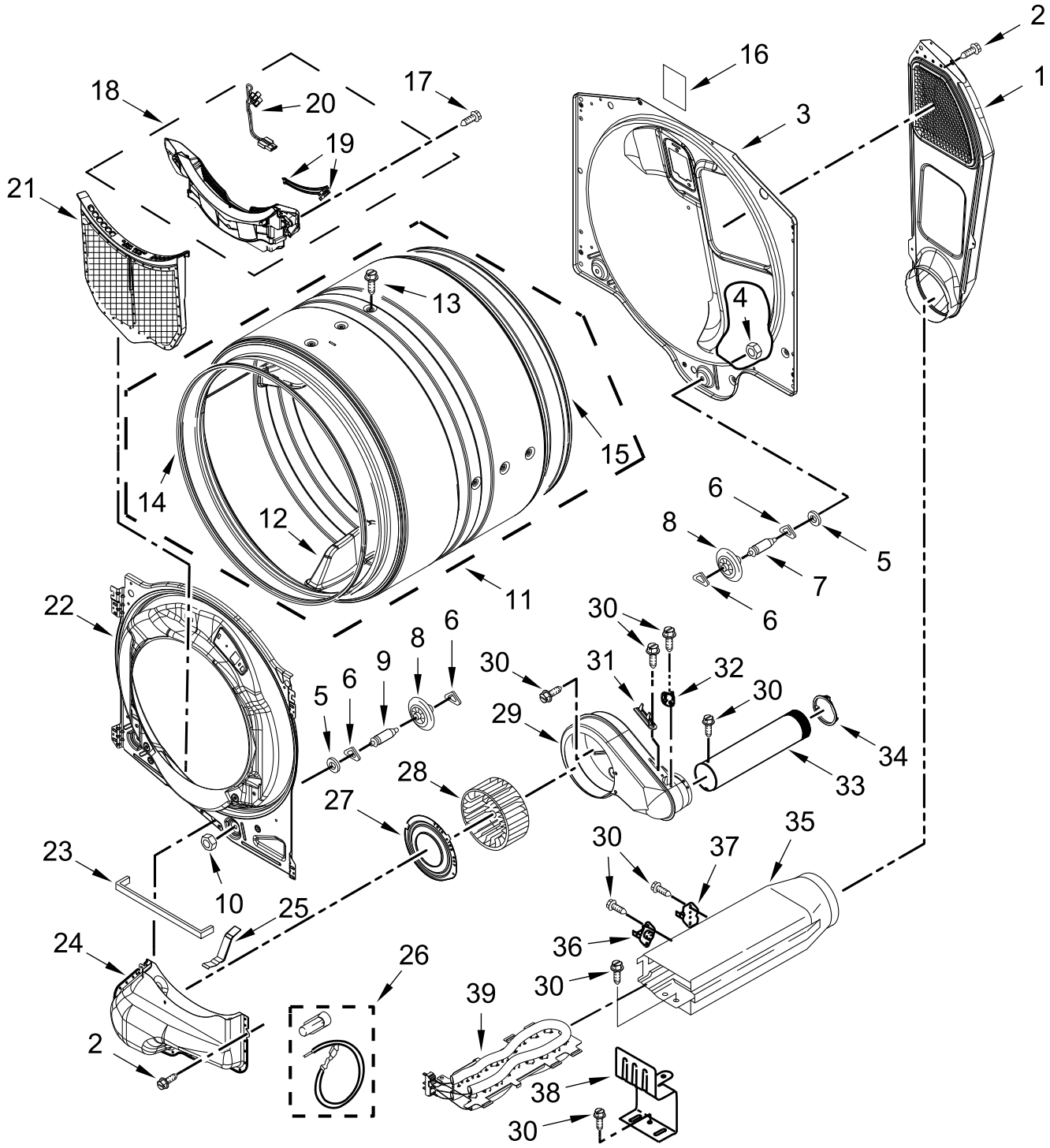

BULKHEAD PARTS

Illus. No.	Part No.	Description
1	W11104018	Assembly, Air Duct
2	3390647	Screw
3	W11162462	Bulkhead, Rear
4	W10001120	Nut, Hex (Left Hand Thread)
5	3387459	Washer
6	W10512946	Washer, Tri Ring
7	W10359272	Shaft, Drum Roller - Left Hand Thread
8	W10314171	Roller, Support
9	W10359271	Shaft, Drum Roller - Right Hand Thread
10	3934666	Nut, Hex
11	W10508188	Assembly, Drum (Complete)
12	W10416098	Baffle, Drum
13	W10219342	Screw
14	W10521122	Seal, Drum Front
15	W10521118	Seal, Drum
16	W10653662	Pad, Foam
17	W10794806	Screw
18	W10672683	Assembly, Outlet Grill and Housing
19	3387223	Sensor, Electrode
20	W10298258	Harness, Sensor
21		Lint Screen
	W10516085	White
22	W10673493	Bulkhead, Front
23	W10211950	Seal, Housing Outlet
24	W10211896	Assembly, Lint Duct
25	W10414388	Clip, Lint Duct
26	279457	Terminal Wire Kit (For Heater Element Wiring Harness Repair)
27	W11254843	Assembly, Collar (Includes Seal)
28	697772	Wheel, Blower
29	W10211911	Housing, Blower
30	693995	Screw
31	W10693363	Fuse, Thermal (91C)
32	8577274	Thermistor
33	W10342188	Exhaust Pipe
34	W10344699	Collar, Duct
35	W10891205	Assembly, Weld Heater Box
36	8557403	Thermostat, High Limit
37	280148	Kit, Thermal Cut-Off (Includes Thermostat)
38	8066099	Bracket, Heater Box
39	W11045584	Element, Heater

DOOR PARTS

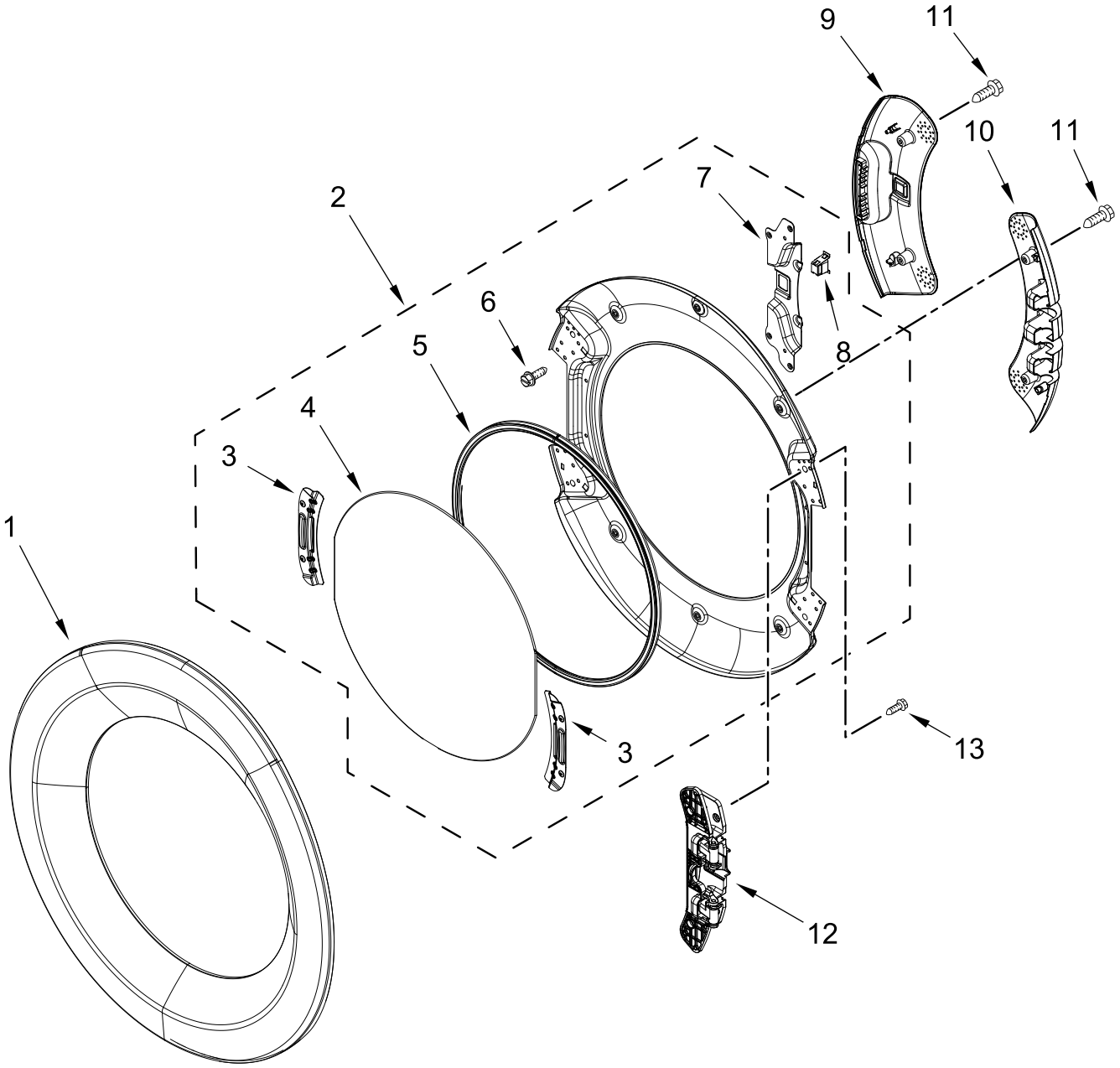

DOOR PARTS

Illus. No.	Part No.	Description
1		Assembly, Outer Door
	W11114013	White
2	W11122999	Assembly, Inner Door
3	W11100789	Bracket, Glass
4	W10891207	Glass, Door
5	W11183899	Seal, Glass
6	W10288126	Screw
7	W11050690	Bracket, Door Catch
8	W10208401	Assembly, Spring Catch
9	W11120683	Cover, Handle
10	W11120174	Cover, Hinge
11	9742177	Screw
12	W11114011	Hinge Assembly
13	8540479	Screw, Grounding

OPTIONAL PARTS (NOT INCLUDED)

PAINT, TOUCH-UP (1/2OZ.)

Illus. No.	Part No.	Description
	72017	White
	W10446202	Chrome Shadow

PAINT, PRESSURIZED SPRAY (12 OZ.)

Illus. No.	Part No.	Description
	350930	White
	350938	Gray Primer

PAINT, BULK (1 QT.)

Illus. No.	Part No.	Description
	799344	White (Uncut)

ACCESSORY PARTS

Illus. No.	Part No.	Description
	8529894	Kit, Hold Down
	8522199	Kit, Dryer Vent Testing
	80047	Kit, Dryer Repair
	W10315283	Kit, Door Reversing
	W10869845	Kit, Stack
	W10886894	Dry Rack

ACCESSORY PARTS|THE FOLLOWING POWER CORD CAN BE ORDERED. IMPORTANT: CHECK LOCAL WIRING CODE REQUIREMENTS TO SEE IF ONE OF THESE MEETS YOUR NEEDS.

Illus. No.	Part No.	Description
	PT220L	4', 30 Amp, 3 Wire, Dryer Cord
	PT400L	4', 30 Amp, 4 Wire, Dryer Cord
	PT600L	6', 30 Amp, 4 Wire, Dryer Cord