RS22T5201SR

SAMSUNG

22 cu. ft. Side-By-Side Counter Depth Refrigerator

Signature Features

Built-in Look with Counter Depth
Built-in look, for a seamless fit. The smooth and streamlined exterior design features beautiful flat doors, a minimal display dispenser, and easy to open recessed handles that blend beautifully into your cabinetry, adding function and style to your kitchen.

Fingerprint Resistant Finish
A finish that withstands everyday smudges, so you spend less time cleaning.

All-Around Cooling
Multi-air vents keep every item on every shelf evenly cooled.

Available Colors

Fingerprint Resistant Stainless Steel (shown)

Fingerprint Resistant Black Stainless Steel

Built-in Look with Counter Depth

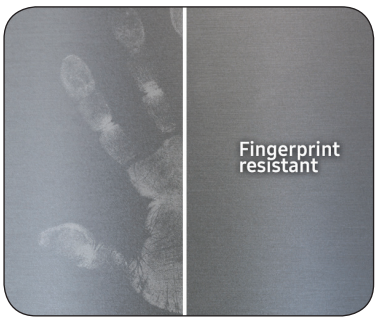

Fingerprint Resistant Finish

Design

- Built-in Look with Counter Depth
- Fingerprint Resistant Finish
- Minimal Display Dispenser: external filtered water and ice
- LED Lighting
- Four Gallon Door Bins
- Two Clear Drawers

Convenience

- Wi-Fi and Bixby Enabled
- Adjustable Top Shelf
- Door Alarm
- Water Filter Indicator
- Sabbath Mode

Performance

- All-Around Cooling
- In-Door Ice Maker - Stores up to 4.4 lbs of ice

Rating

ENERGY STAR® rated: 640 kWh/yr

ADA Compliant

RS22T5201SR

22 cu. ft. Side-By-Side Counter Depth Refrigerator

Installation Specifications

1. Measure the height, width and depth of the opening, making sure to include baseboards, molding tile, countertop overhang, etc. Check to be sure there is enough room to open the door (consider walls, islands or other obstacles when measuring).
2. Refer to illustration below to determine dimensions.
3. Allow 2.5" of clearance on hinge side of refrigerator when installing next to a wall where handle may make contact.
4. Allow 1" minimum clearance at rear for proper air circulation and water/electrical connections. Allow a 3/8" minimum clearance at sides and top for ease of installation.
5. Ensure each door and entryway in the home is wide enough for the refrigerator to be moved through easily.

For optimal usage and to be able to open refrigerator doors completely, do not install next to a wall.

Please note: The following dimension and cutout information is for planning purposes only. For complete installation details, consult manual packed with product, or download manual online at samsung.com.

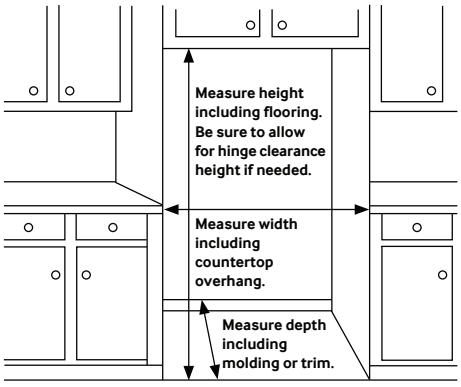

Dimensions

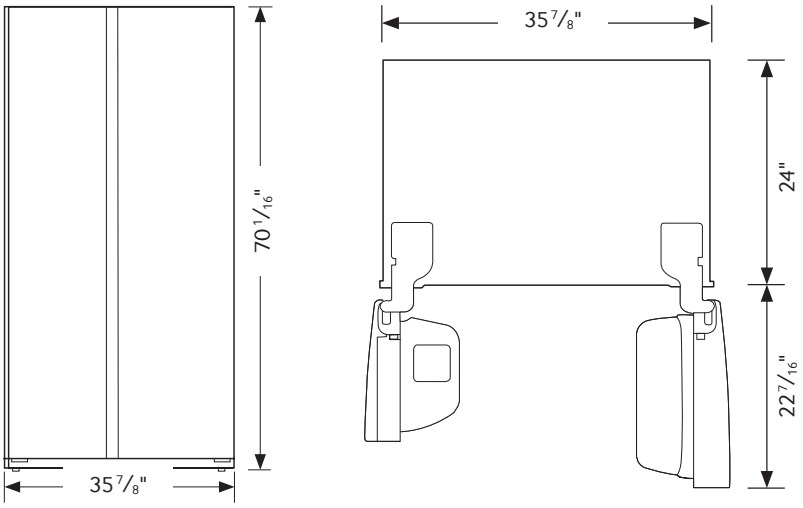

Total Capacity: 22.0 cu. ft.

Refrigerator: 14.6 cu. ft.
- 4 Tempered Glass Shelves
- 2 Clear Drawers, 1 with Flip Cover
- 5 Door Bins
  - 3 Gallon Bins
  - 2 Door Bins
- LED Lighting

Freezer: 7.4 cu. ft.
- External Filtered Water and Ice Dispenser (Crushed or Cubed Ice)
- In-Door Ice Maker
- 5 Tempered Glass Shelves
- 1 Drawer with Flip Cover
- 2 Door Bins
- LED Lighting

Accessories
Water Filter: HAF-QIN

Warranty
One (1) Year Parts and Labor on Refrigerator
Five (5) Years Parts and Labor on Sealed Refrigeration System Only*
Ten (10) Years Parts and Five (5) Years Labor on Digital Inverter Compressor
*Compressor, evaporator, condenser, drier and connecting tubing.

Product Dimensions & Weight
Dimensions (WxHxD with hinges, handles, doors and dispenser): 35 7/8" x 70 1/16" x 28 5/8"

Dimensions (WxHxD without hinges and door): 35 7/8" x 68 5/8" x 24"

Dimensions (WxHxD with hinge and door, no handle): 35 7/8" x 70 1/16" x 28 5/8"

Weight: 238 lbs

Shipping Dimensions & Weight (WxHxD)
Dimensions: 37 3/4" x 75 3/8" x 30 1/8"

Weight: 247 lbs

Color	Model #	UPC Code
Fingerprint Resistant Stainless Steel	RS22T5201SR	887276372174
Fingerprint Resistant Black Stainless Steel	RS22T5201SG	887276372167

Actual color may vary. Design, specifications, and color availability are subject to change without notice. Non-metric weights and measurements are approximate.
©2020 Samsung Electronics America, Inc., 85 Challenger Road, Ridgefield Park, NJ 07660. Tel: 800-SAMSUNG. samsung.com. Samsung is a registered trademark of Samsung Electronics Co., Ltd.