LIMITED EDITION **7 SERIES RANGES**

cast black + rose gold

EXCLUSIVE FEATURES

- **LIMITED PRODUCTION** run of 110 units
- **NEW Black Out Range** utilizing the **NEW** Contemporary Cast Black exclusive color finish
- **NEW Black Out control panel** and landing ledge
- **NEW Rose Gold Accent** on knob bezel, handle endcaps, and name plate
- **PATENTED BlackChrome™ knobs** with CoolLit™ LED backlighting

MODEL NUMBERS

- **VDR73626BBORG** – 36.”W. Dual Fuel Range; 6 burners
- **VDR73624GBORG** – 36.”W. Dual Fuel Range; 4 burners with griddle
- **VDR74828BBORG** – 48.”W. Dual Fuel Range; 8 burners
- **VDR74826GBORG** – 48.”W Dual Fuel Range; 6 burners with griddle
- **VGR73626BBORG** – 36.”W. Gas Range; 6 burners
- **VGR73624GBORG** – 36.”W. Gas Range; 4 burners with griddle
- **VGR74828BBORG** – 48.”W. Gas Range; 8 burners
- **VGR74826GBORG** – 48.”W. Gas Range; 6 burners with griddle

COMMERCIAL-TYPE SURFACE POWER

- **EXCLUSIVE Viking Elevation™ Burners** with brass flame ports boast 23,000 BTUs across the front of all width configurations, with multiple 15,000 BTUs and one 8,000 BTU burner across the rear
- Three burner sizes efficiently deliver heat to any size cookware
- **EXCLUSIVE VariSimmer™ Setting** on ALL burners provides gentle, even simmering at precisely low cooking temperatures
- **EXCLUSIVE SureSpark™ Ignition System**, ensures automatic ignition/re-ignition, should the burners extinguish at any time while cooking

REVERSIBLE GRIDDLE/GRILL

- Thermostatically controlled non-stick griddle heats evenly to provide consistent cooking across the entire surface and can be easily removed for cleaning
- Reversible Griddle/Grill features the **PATENT PENDING StayCool™ Trough Handle and grease containment system** that strategically directs excess grease into a removable capture trough for quick and easy cleanup
- Optional ViChrome™ Griddle accessory interchanges with the non-stick griddle providing versatility for griddling and easy cleanup

INNOVATIVE FEATURES

- **EXCLUSIVE GentleClose™ Door** allows the door to slowly close, ensuring delicate baked goods are not disturbed
- **EXCLUSIVE TruGlide™ Full Extension Racks** for safe and easy removal of heavy bakeware

EASY OPERATION AND CLEANUP

- **EXCLUSIVE SoftLit™ LED Lights** accent the control panel and illuminate knobs
- **EXCLUSIVE** seamless, heavy gauge porcelain burner pan with elevated flame ports prevent spillovers from baking on, making cleanup easy
- Continuous grate design allows easy movement of pots and pans from burner to burner
- Easy to clean porcelainized oven cavity
- Grates, burner caps, knobs, griddle and accessories can be easily removed and taken to the sink for cleaning

DUAL FUEL OVEN FUNCTIONS

- Largest self-clean oven in the industry has enough space to accommodate various size bakeware for multi-rack cooking
- **PATENTED Vari-Speed Dual Flow™ Convection System** has the largest fan in the industry; the 8 1/2" two-speed fan works bi-directionally for maximum airflow and excellent cooking results
- 12 high-performance cooking modes: bake, convection bake, TruConvec™ Convection Cooking, convection roast, hi, med and low broil, convection broil, convection dehydrate, convection defrost, proof (left oven on 48"W. range), and self-clean
- **EXCLUSIVE GourmetGlo™ Infrared Glass Broiler** provides intense heat to lock in savory juices
- Concealed 10 pass dual bake element provides precise temperature control (right oven on 48"W. range)
- Concealed four pass bake element (left oven on 48"W. range)
- **EXCLUSIVE Rapid Ready™ Preheat** provides one of the fastest preheat times - so your oven is ready to begin cooking when you are (right oven on 48"W. range)
- **NEW** larger window opening

GAS OVEN FUNCTIONS

- Extra-large capacity oven has enough space to accommodate various size bakeware for multi-rack cooking
- 36"W. models can accommodate full size commercial sheet pan
- Six high-performance cooking modes: natural airflow bake, convection bake, infrared broil, convection infrared broil, convection dehydrate and convection defrost
- **EXCLUSIVE** combination of single 30,000 BTU U-shaped burner and infrared broiler with SureSpark™ Ignition System (15,000 BTU burner in left oven of 48"W. models)
- **Gourmet Glo™ Infrared Broiler** provides intense searing heat to lock in savory juices
- **EXCLUSIVE Proflow™ Convection Baffle** circulates heat in oven cavity to maximize even cooking (right oven only in 48"W. models)

ACCESSORIES

- **CRG7VGR** – ViChrome™ griddle (for use with griddle model)
- **LPKVGR** – LP/Propane conversion kit for 7 Series
- **GCKVGR** – gas connector kit
- **CBGVGR** – bamboo cover (for use with griddle model)

WARRANTY

- **2-Year Full** – complete product
- **90-Day Full** – cosmetic parts such as glass, painted items and decorative items
- **5-Year Limited** – gas burners and electric oven elements

36” AND 48” W. RANGES				
DESCRIPTION	**VGR73626B/VGR73624G**	**VGR7482B/VGR74826G**	**VDR73626B/VDR73624G**	**VDR74828B/VDR74826G**
Overall Width	35-7/8” (91.1 cm)	47-7/8” (121.6 cm)	35-7/8” (91.1 cm)	47-7/8” (121.6 cm)
Overall Height	To top of side trim – 35-15/16” (91.3 cm) min. 37-9/16” (95.4 cm) max. Legs adjust – 1-5/8” (4.1 cm)			
Overall Depth from Rear*	To end of side panel – 25-1/4” (64.1 cm); To front of door – 26-15/16” (68.4 cm); To end of door handle – 30” (76.2 cm) *Add 3/4” (1.9 cm) to overall depth for models installed against a combustible wall.			
Additions to Base Height	To top of island trim – add 1” (.5 cm); To top of backguard – add 10” (25.4 cm); To top of high shelf – add 24-1/8” (61.3 cm)			
Gas Manifold Pressure	Natural 5.0” W.C.P./ Liquid Propane LP 10.0” W.C.P.			
Surface Burner Rating Natural Gas/LP	Front: (3) 23,000 BTU (6.7 kW) / 20,000 BTU (5.8 kW) Rear: (2) 15,000 BTU (4.4 kW) / 13,500 BTU (4.0 kW) (1) 8,000 BTU (2.3 kW) / 8,000 BTU (2.3 kW)	Front: (4) 23,000 BTU (6.7 kW) / 20,000 BTU (5.8 kW) Rear: (3) 15,000 BTU (4.4 kW) / 13,500 BTU (4.0 kW) (1) 8,000 BTU (2.3 kW) / 8,000 BTU (2.3 kW)	Front: (3) 23,000 BTU (6.7 kW) / 20,000 BTU (5.9 kW) Rear: (2) 15,000 BTU (4.4 kW) / 13,500 BTU (4.0 kW) (1) 8,000 BTU (2.3 kW) / 8,000 BTU (2.3 kW)	Front: (4) 23,000 BTU (6.7 kW) / 20,000 BTU (5.9 kW) Rear: (3) 15,000 BTU (4.4 kW) / 13,500 BTU (4.0 kW) (1) 8,000 BTU (2.3 kW) / 8,000 BTU (2.3 kW)
Griddle Burner Rating	15,000 BTU Nat./13,500 BTU LP (4.4 kW Nat/4.0 kW LP)			
Gas Requirements	Shipped Natural or LP/Propane, accepts standard residential 1/2” (1.3 cm) ID gas service line. Unit is field convertible with proper conversion kit	Shipped Natural or LP/Propane, accepts standard residential 3/4” (1.9 cm) ID gas service line. Unit is field convertible with proper conversion kit	Shipped Natural or LP/Propane, accepts standard residential 1/2” (1.3 cm) ID gas service line. Unit is field convertible with proper conversion kit	
Electrical Requirements	120VAC/60 Hz; 4 ft. (121.9 cm), 3-wire cord with grounded 3-prong plug attached to unit		See Electrical Requirements information in installation guide	
Maximum Amp Usage	1.5 amps	2.0 amps	240V - 28.5 amps / 208V - 24.7 amps	240V - 43.0 amps / 208V - 37.3 amps
Oven Interior Width	29” (73.7 cm)	Right oven – 23” (58.4 cm) Left oven – 12-1/8” (30.8 cm)	30-5/16” (77.0 cm)	Right oven - 25-5/16” (64.3 cm) / Left oven - 13-3/4” (34.9 cm)
Oven Interior Height	16-1/8” (40.9 cm)		16-1/2” (41.9 cm)	
Oven Interior Depth	Overall: 18-3/4” (47.6 cm) Measured to AHAM Standard**: 17” (43.2 cm)		Overall: 19-1/2” (41.9 cm) Measured to AHAM Standard**: 16-13/16” (42.7 cm)	
Oven Volume Overall Measured to Aham Standard**	5.1 cu. ft. 5.1 cu. ft.	Right - 4.0 cu. ft. / Left - 2.1 cu. ft. Right - 3.7 cu. ft. / Left - 2.0 cu. ft.	5.6 cu. ft. 4.9 cu. ft.	Right - 4.7 cu. ft. / Left - 2.6 cu. ft. Right - 4.1 cu. ft. / Left - 2.2 cu. ft.
Approximate Shipping Weight	525 lbs. (236.6 kg)	692 lbs. (314 kg)	525 lbs. (236.6 kg)	692 lbs. (314 kg)

Please do not prepare installation from brochure data only. See installation instructions for important clearance/installation information.
**The AHAM Standard for measuring oven capacity subtracts the door plug and convection baffle dimension from the total oven volume.

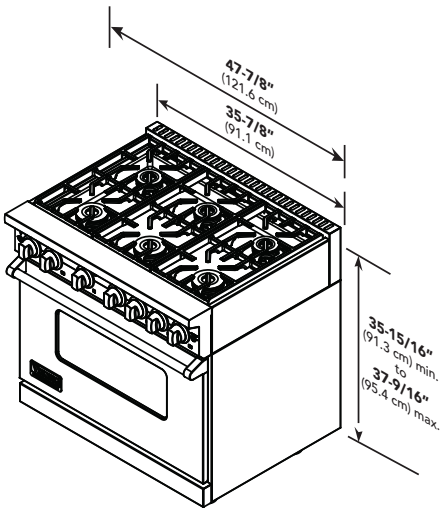

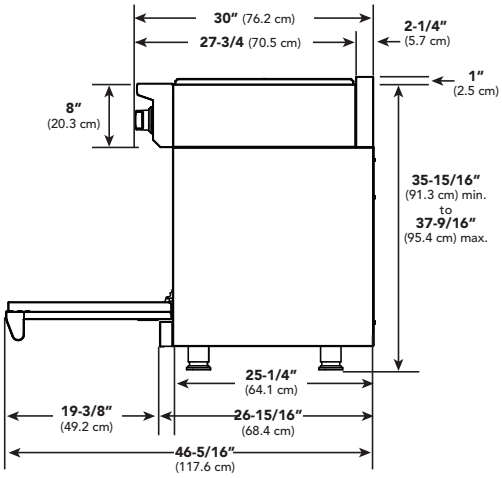

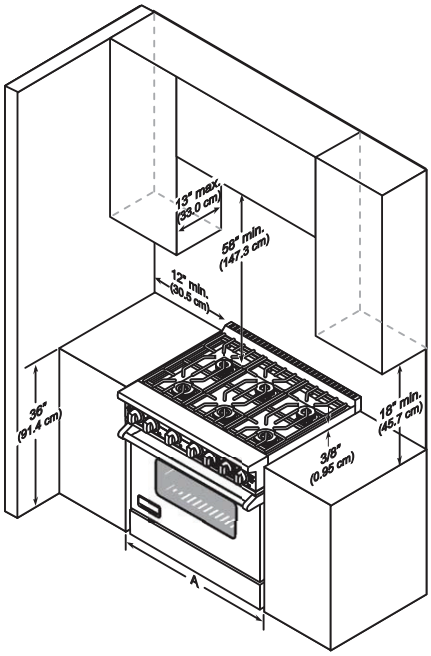

VIKING RANGE, LLC 111 FRONT STREET GREENWOOD, MISSISSIPPI 38930 USA

	36”W. Model	48”W. Model
A	36” (91.4 cm)	48” (121.9 cm)

For detailed product information, model numbers, or to request a quote call 1-888-845-4641 or visit vikingrange.com

© 2019 Viking Range, LLC All rights reserved. Specifications subject to change without notice.