ORE124 • 24" Refrigerator • Outdoor Collection

Stainless Solid

Additional Options

- Stainless lock model available

Stainless
Lock Model

Key Features

- Convection cooling system provides a quick cool down and consistent temperature
- Extended lower interior maximizes storage options
- Digital touch pad control with blue LED display
- Stainless steel cabinet, toe-kick, and full-wrap door
- Volume of 5.7 cu ft holds up to 117 bottles (12 oz) or 194 cans (12 oz)
- Temperature range: 34°F - 60°F
- Bright white LED lighting
- White interior
- Three adjustable tempered glass shelves
- Stainless steel handle (7/8" diameter)
- Field reversible door is shipped right-hand hinged
- Built-in or freestanding
- Four adjustable leveling legs
- Door lock model available

Model Details

Model	Voltage/Hz	Door Swing	Finish	Shipping Weight
UORE124-SS01A	115 / 60	Field Reversible	Stainless Solid	109 lb
UORE124-SS31A	115 / 60	Field Reversible	Stainless Solid (Lock)	109 lb

Accessories

Model	Description	Finish	Shipping Weight
ULAFREESTANDS	Freestanding Kit	Stainless	3 lb

ORE124 • 24" Refrigerator • Outdoor Collection

Front

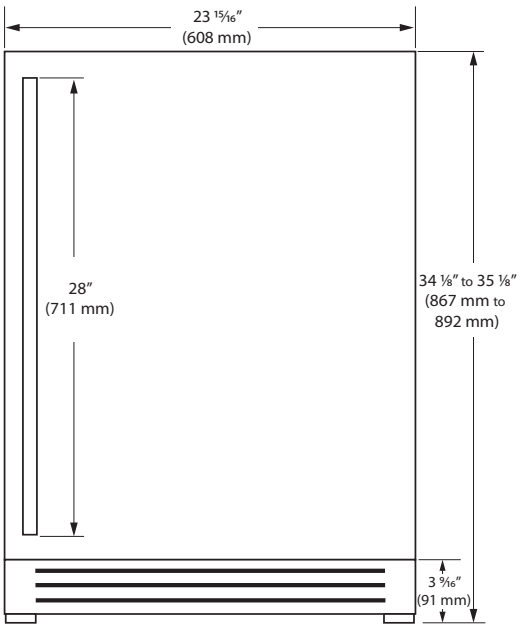

Side

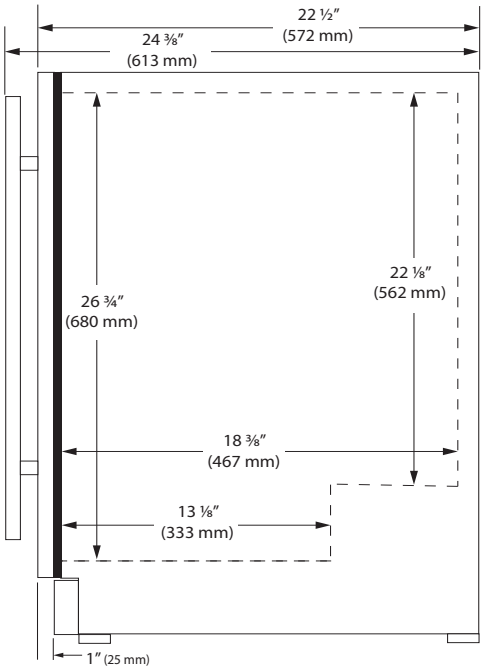

Top

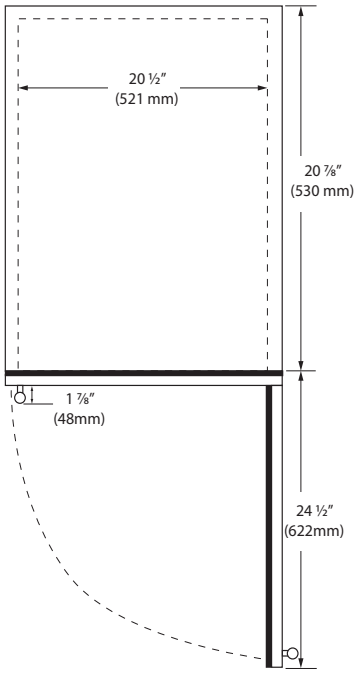

Specifications

Model	ORE124
Amps: Running	1.2
Capacity: Bottle 12 oz	117
Capacity: Can (12 oz)	194
Capacity: Volume (cu ft)	5.7
Capacity: Wine Bottle (750 ml)	N/A
Dimensions: Product Depth	22 1⁄2″ / 572 mm
Dimensions: Product Height	34 1⁄8″ / 867 mm
Dimensions: Product Width	23 15⁄16″ / 608 mm
Energy Consumption: Avg. Per Year	240 kWh
ENERGY STAR	Tier 3
Product Weight: Max	109 lb
Refrigerant Type:	R600a
Sabbath (Star K Certified)	Yes
Temperature Range	34˚F - 60˚F

Back

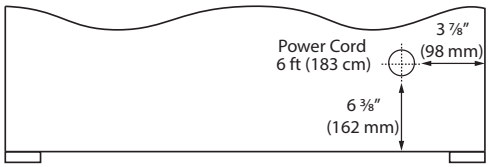

Cabinet Cut-Out

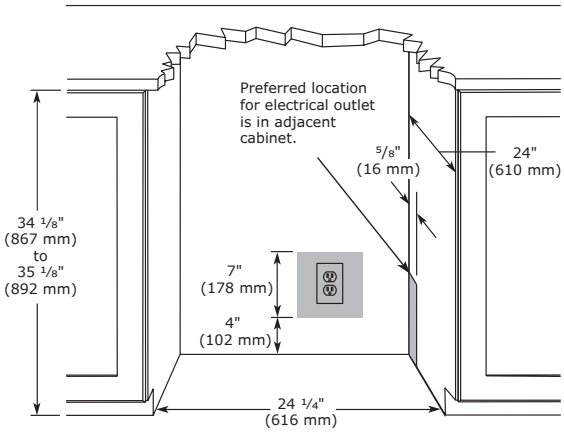

Warranty

- 1 Year (parts & labor) / 5 year sealed system (parts)

\+ **Additional 1 Year (parts & labor) warranty at no cost with product registration**

See complete warranty for details

Installation Notes

- 24" cutout width sufficient if door protrudes beyond adjacent cabinetry
- No additional clearance is needed for ventilation
- Do not obstruct front grille air flow

Please visit u-line.com to view this model's User Guide & Service Manual. All Specifications are subject to change without notice.

8900 North 55th Street • Milwaukee, Wisconsin 53223 USA • +1.414.354.0300 • sales@u-line.com • u-line.com