Miele

Puristic Wall Ventilation Hood

DA 6690 W OBSW

mieleusa.com

Specification Sheet TRS 04102015

Puristic Wall Ventilation Hood
DA 6690 W OBSW

DA 6690 W HVBR

Features:

- LED ClearView lighting
- Con@ctivity - communication between hood and cooktop
- Touch on Glass controls
- Four fan speeds (incl. intensive)
- Removable dishwasher-safe stainless steel grease filter
- Filter saturation indicator (grease and charcoal filters)
- Delayed shutdown for 5 or 15 minutes
- Automatic shutdown of intensive level, programmable for 10 minutes

SPECIFICATIONS	
DA 6690 W OBSW — Item 28669040USA	
Max CFM	625 CFM
Canopy Dimensions	35 3/8" (898mm) W x 3 3/8" (85mm) H x 19 11/16" (500mm) D
Vented Height	28" (710mm) - 40 9/16 (1030mm)
Recirculation Height	33 1/16" (840mm) - 45 11/16" (1160mm)
Chimney Dimensions	11 3/8" (290mm) W x 10 5/8" (270mm) D
Electrical	
Electrical Requirements	120 V, 60 Hz, 15 Amps
Power Cord	NEMA 5-15 molded plug, Length 2.5 ft (0.75m)
Exhaust Duct	
Recommened Duct Diameter	6" (150mm)
Shipping	
Shipping Weight	57.2 lbs (26kg)
Support	
Call Miele	800.843.7231
Miele Website	www.mieleusa.com
20/20 Link	2020technologies.com

PRODUCT VIEW

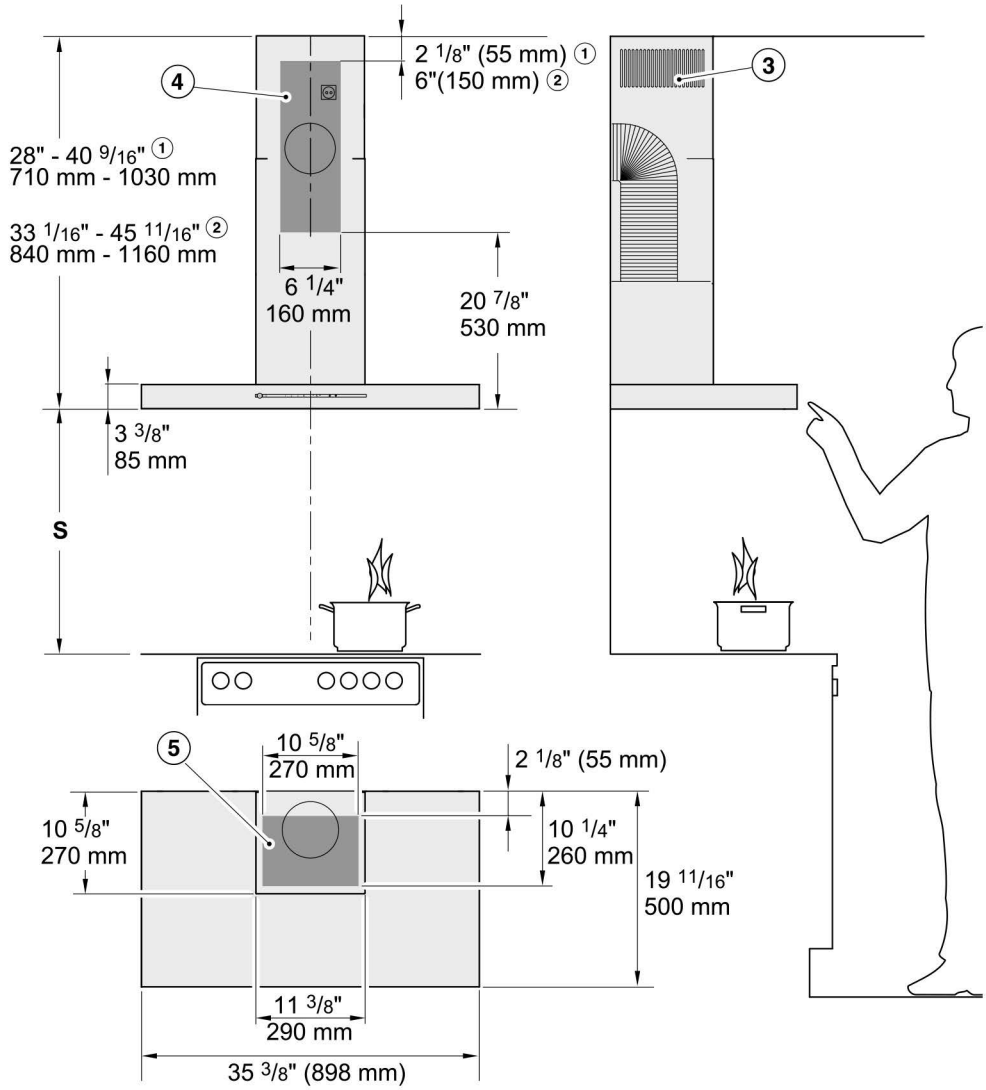

The drawing is not to scale.

① Extraction

② Recirculation

③ Air vent positioned at top for recirculation

④⑤ Mounting area (only ④ is required for recirculation hoods). Wall and ceiling area for exhaust duct opening and for wall recepticle installation. Placement of recepticle on wall is required for recirculating hoods.

Vent collar ∅ 6" (150 mm), with adapter ∅ 5" (125 mm).

S - Distance between cooktop and ventilation hood. Please see manual for further detail.