Miele

Operating Instructions
Dishwasher

To prevent accidents and machine damage, read these instructions before installation or use.

en-US HG05 M.-Nr. 10 544 680

Contents

IMPORTANT SAFETY INSTRUCTIONS 5

Guide to the dishwasher 14
Appliance overview 14
Control panel 15

Caring for the environment 16
Energy-saving dishwashing 16

Before using for the first time 17
Opening the door 17
Closing the door 17
Before using the appliance for the first time, you require: 18
Rinse aid 18
Adding rinse aid 18
Rinse aid indicator 19
Setting the rinse aid dosage 20

Loading the dishwasher 21
Tips 21
Loading examples 23
Upper basket 27
Adjusting the upper basket 28
Lower basket 29
Cutlery 30
Cutlery tray (depending on model) 30
Cutlery basket (depending on model) 31

Operation 32
Detergent 32
Turning on 34
Selecting a program 34
Starting a program 35
Time display 35
Energy management 36
At the end of the program 36
Turning off the dishwasher 37
Unloading the dishwasher 37
Interrupting a program 38
Changing a program 38

Options 39
Short 39
Turning off the refill indicator 40

Contents

Delay Start 41
Buzzer tones 43
Optimize Standby 44
Factory default settings 45

Program overview 46

Cleaning and care 48
Cleaning the wash cabinet 48
Cleaning the door and the door seal 48
Cleaning the control panel 48
Cleaning the door front 49
Filter system 50
Cleaning the spray arms 52

Frequently Asked Questions 53
Technical problems 53
Water intake fault 55
Water drainage fault 56
General problems 57
Noises 58
Poor cleaning results 59

Frequently asked questions 62
Cleaning the drain pump and non-return valve 62

Customer service 63
Repairs 63
Warranty 63

Optional accessories 64

Installation Instructions 67
Electrical connection 68

Water connection 70
Water intake 70
Drainage 71

Sound emission testing 72

IMPORTANT SAFETY INSTRUCTIONS

This dishwasher complies with current safety requirements. Inappropriate use can, however, lead to personal injury and damage to property.

To avoid the risk of accidents and damage to the dishwasher, please read the installation plan and the operating instructions carefully before it is installed and used for the first time. Both contain important information on its installation, safety, use and maintenance.

Keep the installation plan and the operating instructions in a safe place and pass them on to any future owner.

Miele cannot be held liable for damage caused by non-compliance with this information.

Correct use

▶ This dishwasher is intended for use in domestic households and similar residential environments.

▶ This dishwasher is not suitable for outdoor use.

▶ It must only be used as specified in these operating instructions for cleaning domestic dishes and cutlery. Any other usage is not supported by the manufacturer and could be dangerous.

▶ This appliance is not intended for use by persons (including children) with reduced physical, sensory or mental capabilities, or lack of experience and knowledge.

Safety with children

▶ Children must be kept away from the appliance unless they are constantly supervised.

▶ Children should be supervised to ensure that they do not play with the appliance. Keep small children away from the appliance at all times to avoid the risk of injury. There is the risk that children may lock themselves in the dishwasher.

▶ If the automatic door opening mechanism (depending on model) is active keep young children away from the area in which the door opens. Danger of injury in the unlikely event of a fault with the opening mechanism.

▶ Danger of suffocation! Ensure that any plastic wrappings, bags, etc. are disposed of safely and kept out of the reach of children.

▶ Keep children away from detergents. Dishwasher detergents can cause burning in the mouth, nose and throat if swallowed, or inhibit breathing. Keep children away from the dishwasher when the door is open. There could still be detergent residues in the cabinet. Seek medical attention immediately if your child has swallowed or inhaled detergent.

Technical safety

▶ Installation, repair, and maintenance work should only be performed by a Miele-authorized service technician. Work by unqualified persons could be dangerous and may void the warranty.

▶ Before installation, check the dishwasher for visible signs of damage. Under no circumstances should you use a damaged dishwasher. A damaged dishwasher could be dangerous.

▶ The electrical safety of this appliance can only be guaranteed when continuity is complete between it and an effective grounding system. It is most important that this basic safety requirement is present and regularly tested and, where there is any doubt, the electrical system in the house should be checked by a qualified electrician.
Miele cannot be held liable for the consequences of an inadequate grounding system (e.g. electric shock).

▶ Reliable and safe operation of this dishwasher can only be assured if it has been connected to the electrical supply.

▶ The dishwasher must only be plugged into the electricity supply via a suitable switched socket using a 3-pin plug with a grounding contact (it must not be hard-wired). The electrical socket must be easily accessible after the dishwasher is installed so that it can be disconnected from the electricity supply at any time.

▶ There must be no electrical sockets behind the dishwasher. There is a danger of overheating and fire risk if the dishwasher is pushed up against a plug.

▶ The dishwasher must not be installed under a cooktop. The high radiant temperatures which are sometimes generated by a cooktop could damage the dishwasher. For the same reason, it should not be installed next to open fires or other appliances which give off heat, such as heaters, etc.

▶ To avoid the risk of damage to the dishwasher, make sure that the connection data on the data plate (fuse rating, voltage, and frequency) matches the electrical supply before connecting the dishwasher to the mains. Consult a qualified electrician if in any doubt.

▶ Do not connect the dishwasher to the electrical supply until it has been fully installed and any adjustment has been made to the door springs.

▶ The dishwasher may only be operated if the door opening mechanism is working correctly. Otherwise there could be a risk of danger while the automatic door opening mechanism (depending on model) is active.
To check that the door opening mechanism is working correctly:

- The door springs must be adjusted equally on both sides. They are correctly adjusted when the door remains stationary when left half open (approx. 45° opening angle). It is also important that the door cannot fall open.
- The door locking pins automatically retract when the door opens at the end of the drying phase.

▶ Do not connect the appliance to the electrical supply by a multi-socket adapter or an extension lead. These do not guarantee the required safety of the appliance (e.g. danger of overheating).

▶ This appliance must not be installed and operated in a non-stationary location (e.g., on a ship).

▶ Do not install the dishwasher in a room where there is a risk of frost. Frozen hoses may burst or split. The reliability of the electronic module may be impaired at temperatures below freezing point.

▶ To avoid any damage to the appliance, the dishwasher must only be operated when it is connected to a fully vented plumbing system.

▶ The water pressure (flow pressure at the connection point) must be between 7.25 - 145 psi.

▶ A damaged appliance could be dangerous. If the dishwasher gets damaged, turn off the electrical supply and contact Miele.

▶ The manufacturer's warranty will be invalidated if the appliance is not repaired by a Miele-authorized service technician.

▶ Defective components should be replaced by Miele original parts only. Only with these parts can the manufacturer guarantee the safety of the appliance.

▶ During installation, maintenance and repair work, the appliance must be disconnected from the electrical supply (turn it off and withdraw the plug from the socket).

▶ Do not sit the dishwasher on the hose. The hose needs to be free of kinks and able to move freely after installation. Do not place hose or power cord next to a heat source e.g. hot water pipes. Do not expose hose or power cord to corrosive substances (e.g. chloride). Damage of hose or power cord could cause electrical shock or water damage.

▶ If the connection cable is damaged, it must be replaced with a special cable of the same type (available from Miele) by a Miele-authorized service technician only.

Proper installation

▶ The dishwasher must be installed and connected in compliance with the installation plan.

▶ Be careful when installing the dishwasher. Wear protective gloves to avoid injury on any sharp metal components.

▶ The dishwasher must be correctly aligned horizontally to ensure problem-free operation.

▶ In order to ensure stability, built-under and integrated dishwashers must only be installed under a continuous counter which is secured to adjacent cabinetry.

▶ If you want to convert your freestanding dishwasher to a built-under (“U”) model, you will need to order the appropriate conversion kit. If you remove the existing toe-kick, you must replace it with a U-model plinth. This is necessary to avoid the risk of injury caused by protruding metal parts.

▶ The door springs must be adjusted equally on both sides. They are correctly adjusted when the door remains stationary when left half open (approx. 45° opening angle). It is also important that the door cannot fall open.
The appliance may only be used with correctly adjusted door springs.

Proper use

▶ Do not use solvents in the dishwasher. Danger of explosion!

▶ Do not inhale or ingest powder detergent. Dishwasher detergents contain irritant or corrosive ingredients which can cause burning in the nose, mouth, and throat if swallowed, or inhibit breathing. Seek medical attention immediately if detergent has been swallowed or inhaled.

▶ Avoid leaving the door open unnecessarily as someone could trip over it and be injured by it.

▶ Do not sit or lean on the opened door. This could cause the dishwasher to tip and be damaged, and you could get injured.

▶ Dishes can be very hot at the end of a program. Allow them to cool until they are comfortable enough to handle before unloading.

▶ Only use detergent and rinse aid formulated for domestic dishwashers. Do not use dishwashing liquid.

▶ Do not use commercial or industrial detergents as these may cause damage, and there is a risk of a severe explosive chemical reaction (such as an explosive oxyhydrogen gas reaction).

▶ Do not fill the rinse aid reservoir with powder or liquid detergent. This will cause serious damage to the reservoir.

▶ Inadvertently filling the salt reservoir with powder or liquid dishwasher detergent will damage the water softener. Make sure you have picked up the correct packet of dishwasher salt before filling the salt reservoir!

▶ Only use special coarse grained dishwasher salt for reactivation. Do not use other salts such as cooking salt, agricultural grade or gritting salt. These may contain insoluble additives which can impair the functioning of the water softener.

▶ In an appliance with a cutlery basket (depending on model), cutlery is cleaned and dried more efficiently if placed in the basket with the handles downwards. However, to avoid the risk of injury, place knives and forks with the handles upwards.

▶ Plastic items which cannot withstand being washed in hot water, such as disposable plastic containers or plastic cutlery should not be cleaned in the dishwasher. The high temperatures in the dishwasher may cause them to melt or lose shape.

▶ If you use the “FlexiTimer/Delay Start” option (depending on model), make sure that the dispenser is dry before adding detergent. Wipe dry if necessary. Detergent will clog if poured into a damp dispenser and may not be thoroughly dispersed.

▶ Please observe the information given in “Technical data” regarding the capacity of the dishwasher.

Accessories

▶ Use only genuine original Miele parts. If spare parts or accessories from other manufacturers are used, the warranty may become invalid.

Disposal of your old dishwasher

▶ Make the door lock inoperative so that children cannot accidentally shut themselves in. Remove or destroy the locking bracket of the door lock, and make appropriate arrangements for the disposal of the appliance.

SAVE THESE INSTRUCTIONS AND PASS THEM ON TO ANY FUTURE USER

Guide to the dishwasher

Appliance overview

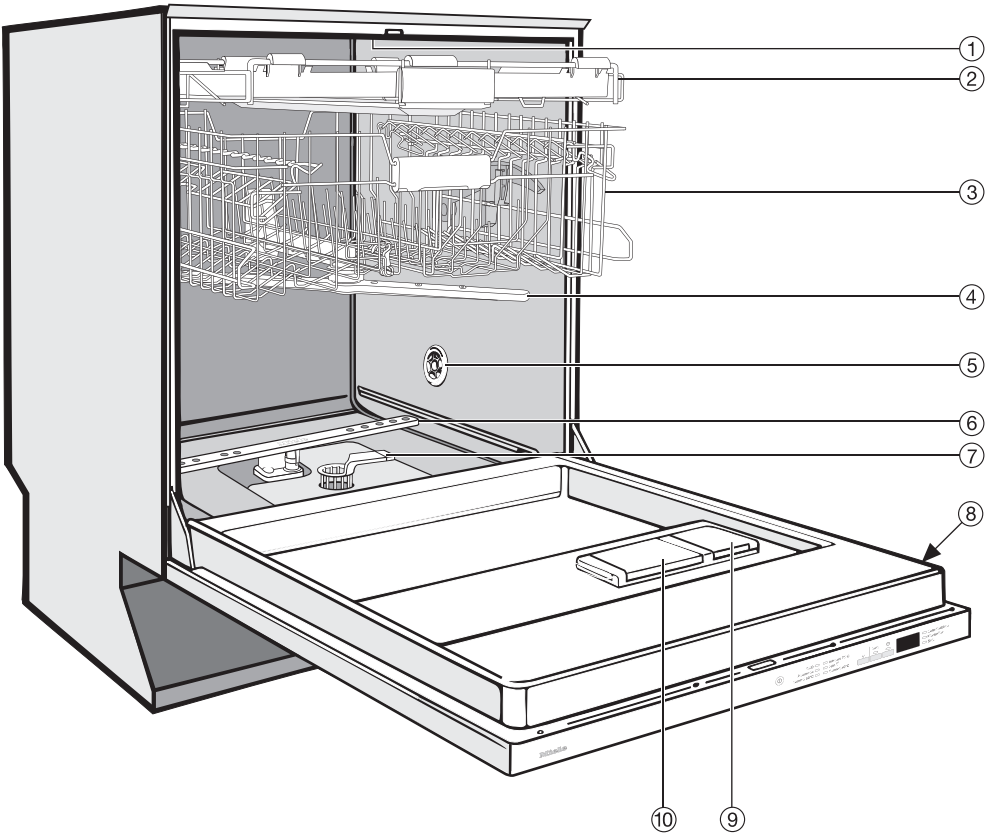

① Upper spray arm (not visible)

② Cutlery tray (depending on model)

③ Upper basket

④ Middle spray arm

⑤ Air intake for drying (depending on model)

⑥ Lower spray arm

⑦ Filter system

⑧ Data plate

⑨ Rinse aid reservoir

⑩ Dual compartment detergent dispenser

Control panel

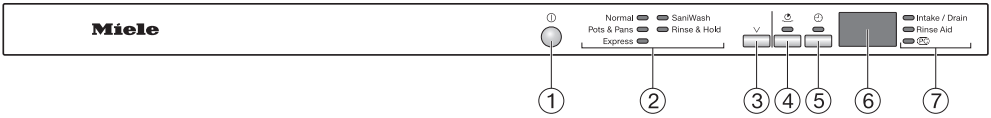

① Button ⏻ (On/Off)

② Program selection

③ Program selection button ∨

④ Short button with indicator light

⑤ Delay Start button with indicator light

⑥ Time display

⑦ Check/Refill indicators

These operating instructions apply to several different dishwasher models with different heights.
The specific dishwasher models are referred to as follows:
Standard = 31 11/16“ (80.5 cm) high dishwashers (integrated)
and 33 1/4” (84.5 cm) high dishwashers (freestanding)
XXL = 33 1/4“ (84.5 cm) high dishwashers (integrated)

Caring for the environment

Disposal of the packing material

The cardboard box and packing materials protect the appliance during shipping. They have been designed to be biodegradable and recyclable.

Ensure that any plastic wrappings, bags, etc. are disposed of safely and kept out of the reach of children. Danger of suffocation!

Disposal of your old appliance

Electrical and electronic appliances contain valuable materials. They also contain certain substances, compounds and components which were essential for the proper functioning and safe use of the equipment. Handling these materials improperly by disposing of them in your household waste can be harmful to your health and the environment. Therefore, please do not dispose of your old appliance with regular household waste and follow local regulations on proper disposal.

Consult with local authorities, dealers or Miele in order to dispose of and recycle electrical and electronic appliances. Miele assumes no responsibility for deleting any personal data left on the appliance being disposed. Please ensure that your old appliance is kept away from children until removal. Observe safety requirements for appliances that may tip over or pose an entrapment hazard.

Energy-saving dishwashing

This dishwasher is economical in the use of water and electricity. For best results follow these tips:

- For most economical dishwashing, make full use of the baskets without overloading the dishwasher.
- Choose a program that best suits the degree of soiling and the type of dishes being washed.
- Select the *Economy* program (depending on model) for energy-saving dishwashing. This program is the most efficient in terms of its combined energy and water consumption at cleaning normally soiled dishware.
- Follow the detergent manufacturer's recommendations on detergent dosage.
- When using powder or liquid detergent, you can use $^{1}/_{3}$ less detergent if baskets are only half full.
- The dishwasher can be connected to a hot water supply for further economies. If the water is heated by for example, solar panels, this would be energy efficient.
  However, if your water is heated by electricity we would recommend connection to cold water.

You can find additional tips on energy-saving dishwashing in “Miele's guide to dishwashing”.

Opening the door

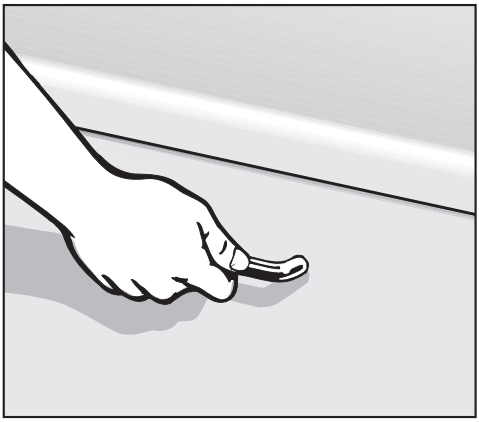

- Pull the handle to open the door.

If the door is opened during operation, all functions are automatically interrupted.

⚠ Water in the dishwasher may be hot. Danger of scalding!
Only open the door during operation if absolutely necessary and exercise extreme caution when doing so.

Closing the door

- Push the baskets in.
- Then lift the door upwards and push until it clicks into position.

⚠ Danger of crushing injuries!
Do not put your hand inside the door as it is closing.

Before using the appliance for the first time, you require:

- Domestic dishwasher detergent
- Rinse aid formulated for domestic dishwashers

Every dishwasher is tested at the factory. There will be residual water in the appliance from this test. It is not an indication that it has been used previously.

Rinse aid

Rinse aid is needed to prevent spotting on dishes and glassware. The rinse aid is filled in the reservoir and the set amount will be automatically dosed.

⚠ Filling the rinse aid reservoir with detergent will damage the reservoir. Only pour rinse aid formulated for residential dishwashers into the reservoir.

Adding rinse aid

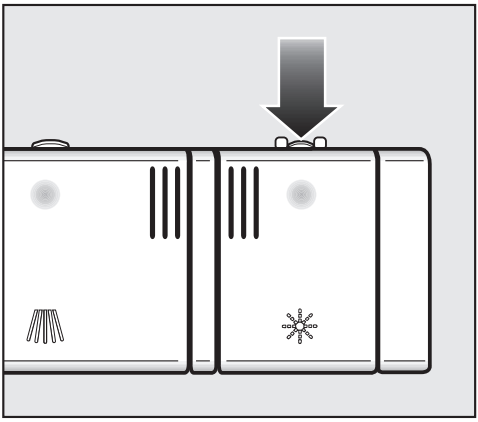

■ Press the button on the lid of the rinse aid reservoir in the direction of the arrow until the flap springs open.

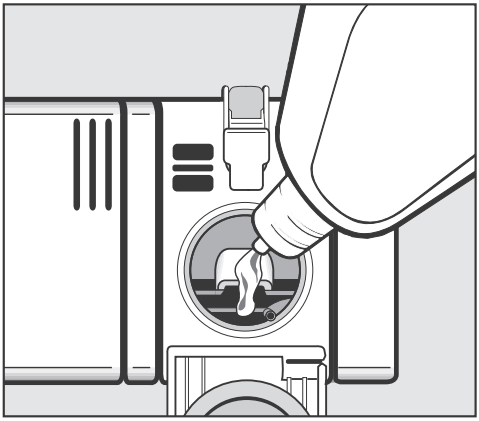

- Add rinse aid only until it is visible in the opening.

The rinse aid reservoir holds approx. 3.7 oz. (110 ml).

- Close the flap firmly so that it clicks into place. Otherwise water can enter the rinse aid reservoir during a program.
- Wipe up any spilled rinse aid. This prevents over-foaming occurring during the next program.

Rinse aid indicator

When the *Rinse aid* indicator lights up, the rinse aid reservoir contains sufficient rinse aid for 2 - 3 programs only.

- Add rinse aid.

If you consistently use a “Tab” detergent, you can deactivate the refill indicators if you wish (see “Options - Refill indicators”).

Setting the rinse aid dosage

You can adjust the rinse aid dosage for best results.

The rinse aid dosage is set in stages from 0 to 6. It is set to 3 at the factory. This is the recommended setting.

The dosage can turn out to be higher than the set value due to the automatic adjustment of the *Automatic* program.

If spots appear on dishware and glassware:

- Increase the rinse aid dosage.

If clouding or smearing appears on dishware and glassware:

- Decrease the rinse aid dosage.

- Turn the dishwasher off with the ⏻ button, if it is turned on.
- Press the program selection button ∨, and, **simultaneously** switch the dishwasher on using the ⏻ button. Keep the program selection button ∨ pressed in for at least four seconds until the lower right program indicator light comes on.

If this does not happen, start the procedure from the beginning again.

- Press the button 3 times.

The indicator light will flash 3 times at short intervals.

The set value will appear in the display after *P*.

The flashing sequence *P 3* will appear in the display.
This indicates a factory default setting of 3.

- Use the program selection button ∨ to select the setting required.
  Each press of the button moves you up a level.

The setting is now stored in memory.

- Turn the dishwasher off with the ⏻ button.

Tips

Remove coarse food residues from the dishes.

There is no need to rinse items under running water!

⚠ Do not wash items soiled with ash, sand, wax, grease, or paint in the dishwasher. These will damage the dishwasher.

Dishes can be loaded anywhere in the baskets, but the following notes should be observed:

- Do not place dishes or cutlery inside other pieces. They will cover each other.
- Load the dishes so that water can access all surfaces. This ensures that they get properly cleaned.
- Make sure that all items are securely positioned.
- Hollow items such as cups, glasses, pans, etc. must be inverted in the basket.
- Tall, narrow, hollow items, e.g., champagne glasses, should be placed in the center of the basket to ensure better water coverage.
- Concave items such as mugs or bowls should be placed at an angle so that the water can run off.
- The spray arms must not be blocked by items which are too tall or hang through the baskets. If in doubt, test for free movement by manually rotating the spray arms.
- Make sure that small items cannot fall through the holders in the baskets.
  Small items, e.g., lids, should therefore be placed in the cutlery tray or cutlery basket (depending on model).

Some foods may contain natural dyes, e.g., carrots, tomatoes or tomato sauce. Plastic items in the dishwasher may discolor if large quantities of these foodstuffs find their way into the dishwasher on the dishes. The stability of plastic items is not affected by this discoloration. Cleaning silver cutlery in the dishwasher may also cause plastic items to discolor.

Items not recommended for dishwashing

- Wooden cutlery, cutting boards and dishes or items with wooden parts
- Craft items, antiques, valuable vases, and decorative glassware
- Plastic items which are not heat-resistant: the high temperatures in the dishwasher may cause them to melt or lose shape.
- Copper, brass, tin and aluminum items may discolor or become matt.
- Colors painted over a glaze may fade after a number of washes.
- Delicate glassware and glassware containing lead crystal: clouding may occur over time.

Please note:

Silverware previously cleaned with a **silver polish** may still be damp or spotted at the end of a program, where water has not run off smoothly. It may need to be rubbed dry with a soft cloth.

Silver which has been in contact with foods containing sulphur can discolor. These include egg yolk, onions, mayonnaise, mustard, fish, and marinades.

⚠ Aluminum components (e.g., range hood grease filters) must not be cleaned with a commercial or industrial cleaning agent.
These may damage the material.

Tip: When purchasing new dishes and cutlery, make sure they are dishwasher-safe.

Glass care

- Clouding may occur on glasses after frequent washing. If delicate glassware is washed in the dishwasher, ensure that only very low temperatures are used (see program chart), or a special glass-care program is used (depending on model). This will reduce the risk of clouding.
- Purchase glassware which is dishwasher-safe (e.g., Riedel glassware).
- Use detergents with glass protective additives.

Loading examples

Loading for 10 standard place settings with cutlery tray

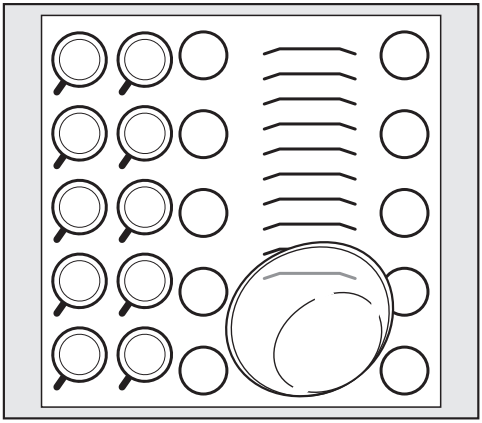

Upper basket

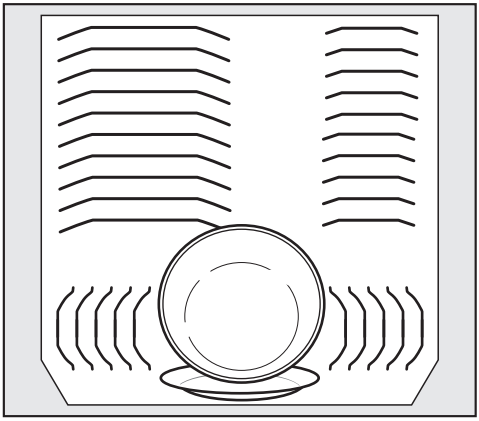

Lower basket

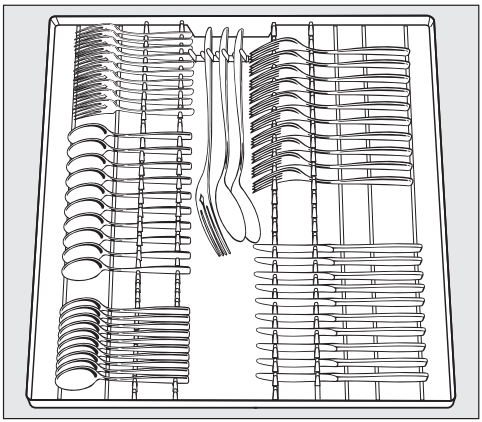

Cutlery tray (depending on model)

Loading for 16 standard place settings with cutlery tray

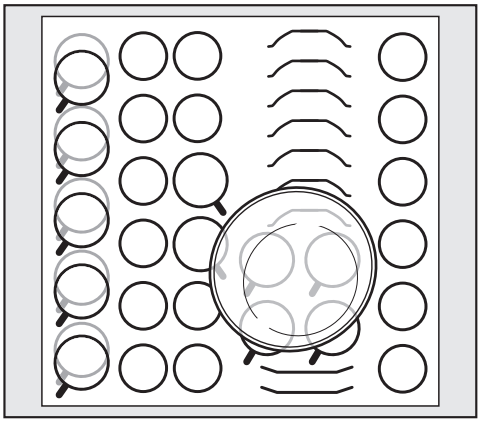

Upper basket

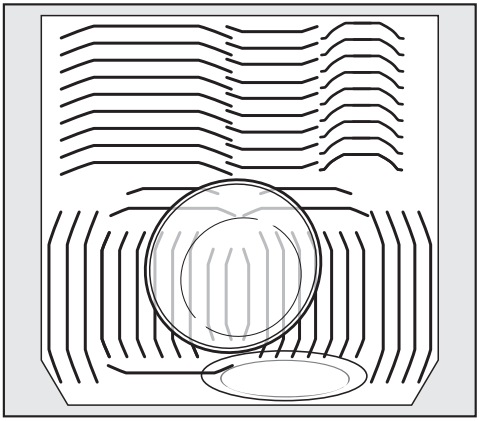

Lower basket

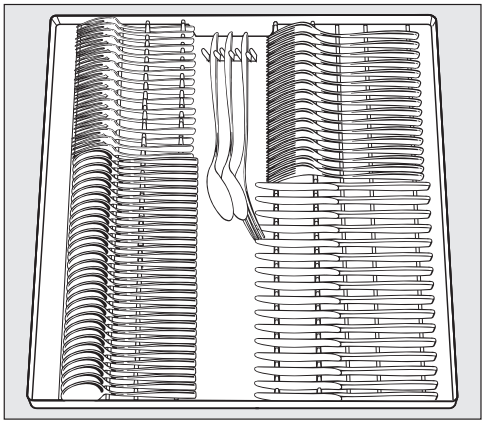

Cutlery tray (depending on model)

Loading for 10 standard place settings with cutlery basket

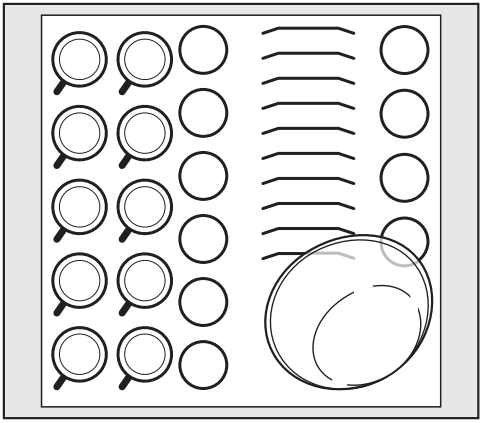

Upper basket

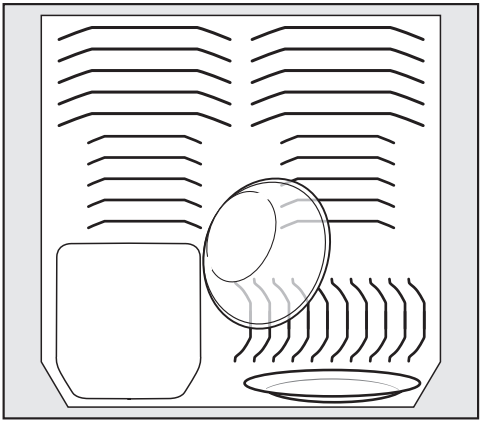

Lower basket

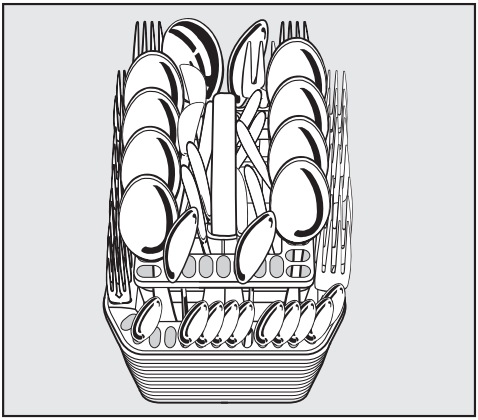

Cutlery basket

Loading for 13 standard place settings with cutlery basket

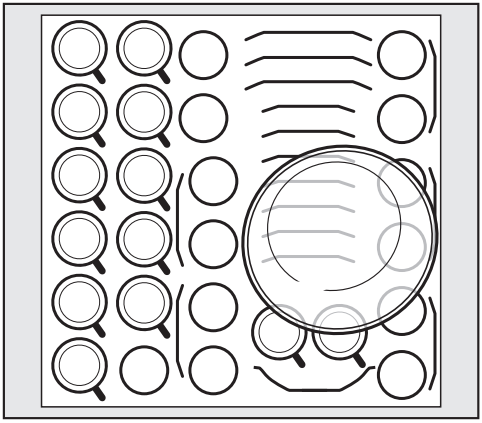

Upper basket

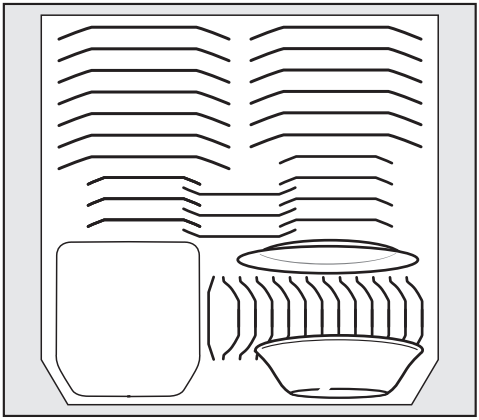

Lower basket

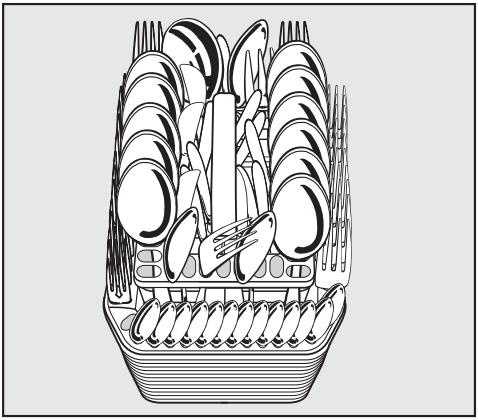

Cutlery basket

Upper basket

⚠ For safety reasons, do not operate the dishwasher without the upper and lower baskets in place (except when running the Tall items program, if available).

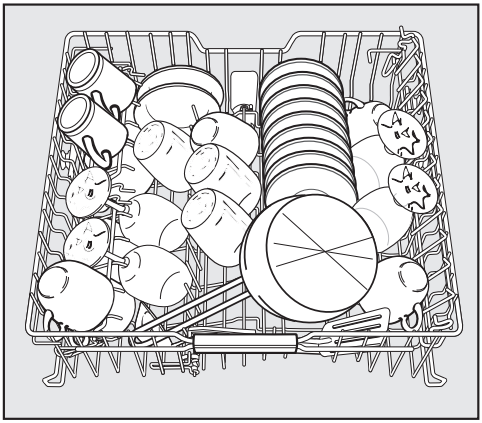

- Use the upper basket for small, lightweight and delicate items such as cups, saucers, glasses, dessert bowls, etc.
  Shallow pans or casserole dishes can also be placed in the upper basket.
- Long items such as soup ladles, mixing spoons, and long knives should be placed lying down across the front of the upper basket.

Adjustable cup rack (depending on model)

- Raise the rack to make room for tall items.

Glasses can be arranged along the positioning rail of the cup rack to give them some support during the program.

- Lower the cup rack and lean the glasses against it, or double stack smaller pieces.

Adjusting the upper basket

In order to gain more space for taller items the upper basket can be adjusted on three levels with 3/4" (2 cm) between each level.

The upper basket can also be set at an angle with one side high and the other side low. Make sure, however, that the basket can slide smoothly in and out of the cabinet.

- Pull the upper basket out.

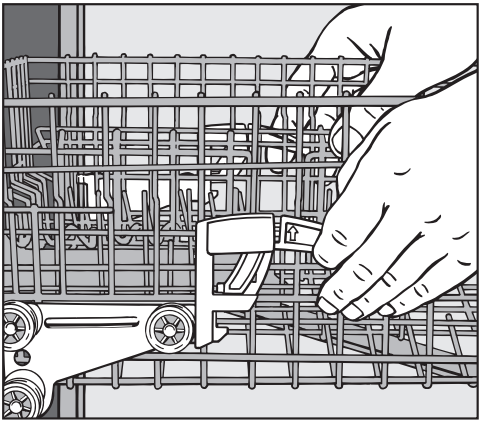

To raise the upper basket:

- Lift the basket until it clicks into place.

To lower the upper basket:

- Pull upwards on the levers at either side of the upper basket.
- Adjust the basket to the desired height and then push the levers securely back down into position.

Depending on the setting of the upper basket, the following plate dimensions can be accommodated.

Dishwashers with cutlery basket
(see data plate for model number)

Upper basket adjust-ment	Plate ∅ in inches (cm)		
	Upper basket		Lower basket
	ADA	Full-size	
Upper	7 7/8" (20)	9 7/16" (24)	12 3/16“ (31) 13 3/4” (35*)
Middle	8 11/16" (22)	10 1/4" (26)	11 7/16" (29)
Lower	9 7/16" (24)	11" (28)	10 5/8" (27)

Dishwashers with cutlery tray
(see data plate for model number)

Upper basket adjust-ment	Plate ∅ in inches (cm)		
	Upper basket		Lower basket
	ADA	Full-size	
Upper	7 7/8" (15)	7 1/2" (19)	12 3/16“ (31) 13 3/4” (35*)
Middle	6 11/16" (17)	8 1/4" (21)	11 7/16" (29)
Lower	7 1/2" (19)	9 1/16" (23)	10 5/8" (27)

* When tilted, plates of up to 13 3/4“ (35 cm) can be accommodated (see ”Lower basket“).

Depending on the setting of the upper basket, a variety of plate dimensions can be accommodated.

Lower basket

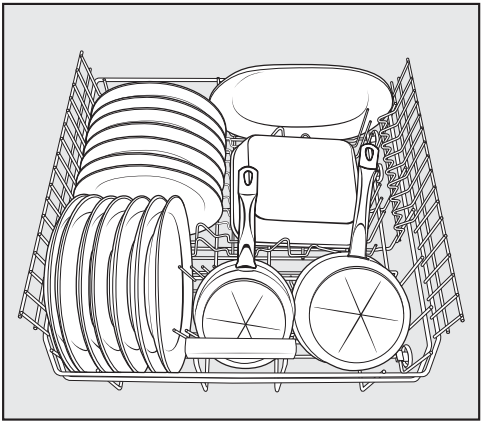

- For larger and heavier items such as plates, serving platters, saucepans, bowls, etc.
  Glasses, cups and small items such as saucers can also be placed in the lower basket. Do not place thin, delicate glassware in the lower basket.

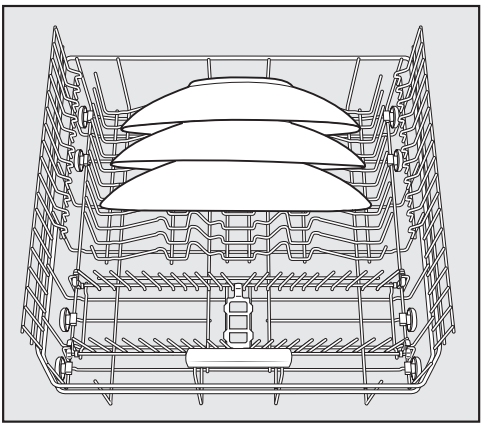

- Place large platters and dishes in the center of the lower basket.

When tilted, plates up to 13 3/4" (35 cm) in diameter can be accommodated.

MultiComfort area

The rear section of the lower basket is used for washing cups, glasses, plates, pots and pans.

Hinged spikes

The spikes at the front are used for washing plates, soup bowls, platters, dessert bowls, and saucers.

The spikes can be lowered to make more room for large items, e.g. pots, pans, and bowls.

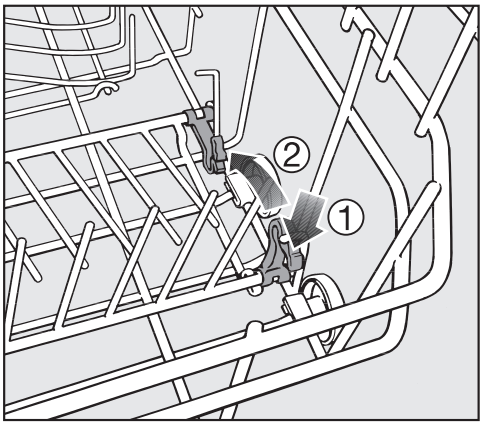

- Press the yellow lever downwards ①, and then lower the spikes ②.

Cutlery

Cutlery tray (depending on model)

- Arrange the cutlery in the tray as shown.

To make unloading much easier, cutlery should be grouped in zones, one for knives, one for forks, one for spoons, etc.

Spoon heads should be placed in contact with at least one of the serrated retainers on the base of the cutlery tray to ensure that water runs off them freely.

The upper spray arm must not be blocked by items which are too big.

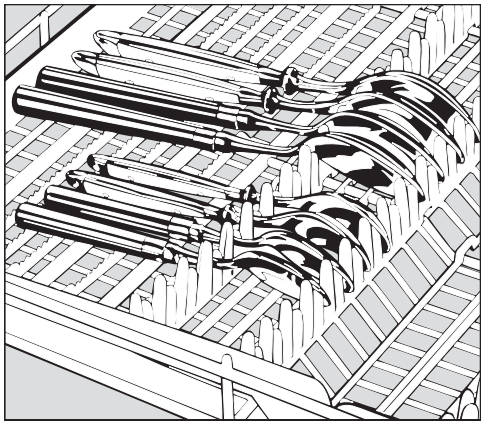

- If spoon handles do not fit between the holders, lay them the other way round.

Cutlery basket (depending on model)

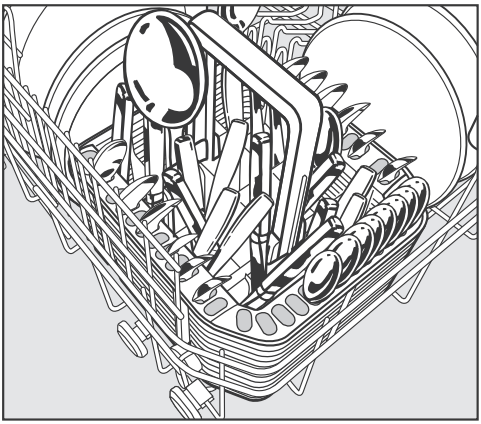

The cutlery basket can be placed anywhere on the front rows of spikes in the lower basket.

- To avoid the risk of injury, knives and forks should be placed with the handles upwards in the basket. However, cutlery placed handle down in the basket will come out cleaner and drier.
- Place small items of cutlery in the individual slots on three sides of the cutlery basket.

Cutlery insert for the cutlery basket

Use the insert supplied for heavily soiled items of cutlery. The insert separates the items so that they can be more easily accessed by water.

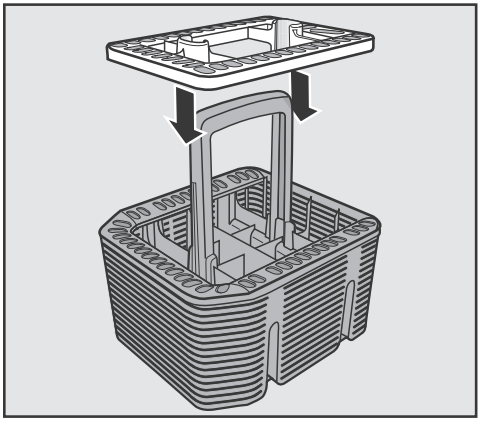

- Fit it onto the cutlery basket if required.

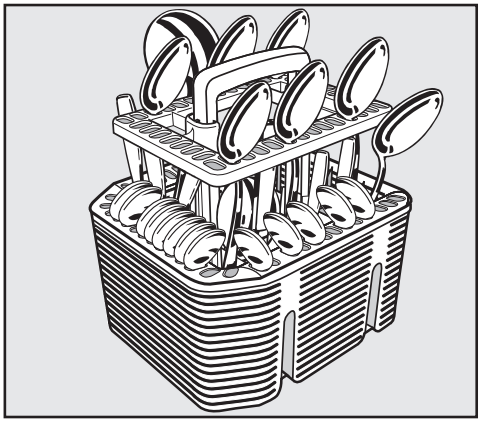

- Insert cutlery with the handles facing downwards.
- Distribute them evenly along the insert.

Detergent

⚠ Only use detergents formulated for domestic dishwashers.

Refer to the manufacturer's packaging as to whether Tab products are suitable for the water hardness level in your area.
Please note that the cleaning and drying results of Tab detergents can vary greatly.

For optimum cleaning and drying results, use Miele dishwasher detergent and add Miele salt and Miele rinse aid separately. See “Optional accessories.”

Detergent dosage

- Follow the dosage recommended by the manufacturer on the packaging.
- Unless directed otherwise, use one detergent tab or add 1 1/4 - 2 tablespoons (20 - 30 ml) detergent to compartment II, depending on the level of soiling. With very heavy soiling you can also add a small amount of detergent to compartment I.
- Tabs may not dissolve completely when the Express program (if available) is used.

Use only the recommended amount of detergent. Continued use of too much detergent may cause machine damage.

⚠ Dishwasher detergents can cause burning in the nose, mouth, and throat if swallowed, or inhibit breathing.
Avoid inhaling or swallowing dishwasher detergent. Keep children away from detergent. Keep detergent out of the reach of children. Keep children away from the dishwasher when the door is open. There could still be detergent residues in the dishwasher. Only add detergent just before starting the program and lock the door with the child safety lock (depending on model).

Adding detergent

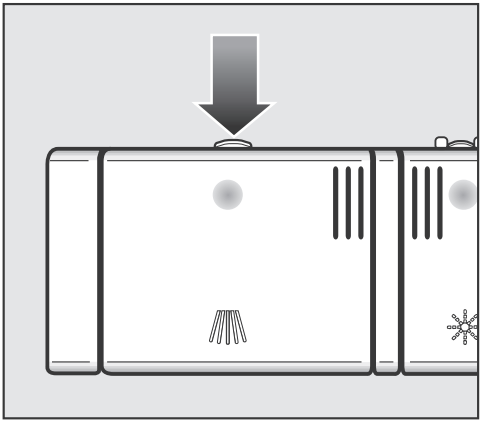

- Press the opening catch on the detergent dispenser. The flap will spring open.

The flap is always open at the end of a program.

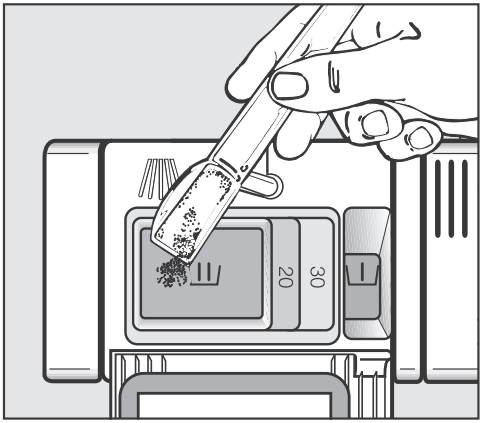

- Add the required amount of detergent and close the flap.
- Make sure that the detergent packaging is properly closed after use to avoid it getting damp and becoming lumpy.

Dispensing aid

Compartment I holds a maximum of 2 teaspoons (10 ml),
Compartment II holds a maximum of 3 ½ tablespoons (50 ml) of detergent.

The marks in compartment II indicate the levels of approximately 1 ¼ and 2 tablespoons (20 and 30 ml) respectively. The marks indicate the approximate fill level in ml when the door is open in a horizontal position.

Turning on

- Turn on the water supply if it is turned off.
- Open the door.
- Make sure the spray arms are not obstructed.
- Turn the dishwasher on with the ⏻ button.

The indicator light next to the program selected will come on.

Selecting a program

Choose your program according to the type of load and the degree of soiling.

The different programs and their uses are described in the **Program Overview** chapter.

- Use the program selection button ∨ to select the program required.

The indicator light for the program selected will light up.
The program duration will appear in hours and minutes in the display.

You can now select program options (see “Options”).

If any program options are selected, the appropriate indicator lights will also light up.

Starting a program

- Start the program by closing the door within four seconds of the last press of a button.

The program will begin.

If you do not close the door within four seconds, the indicator lights of the selected program and the time display will flash.
The program cannot be started until you press the program selection button and close the door within four seconds.

A program should only be canceled in the first few minutes, if at all. Otherwise important program stages could be omitted.

Time display

The duration of the program selected appears in hours and minutes in the display before the program begins. During the program, the time left until the end of the program is displayed.

The program duration displayed may vary with the same program. It is influenced by, among other things, the water temperature at each intake, the reactivation process, the softener assembly, the type of detergent, the amount of dishes, and the amount of soiling.

When a program is selected for the first time, the display will show the average program duration for a cold water intake.

The times shown in the program overview refer to standard test loads and temperatures.

Each time a program is run, the electronic module calculates the program duration required depending on the temperature of the water taken into the dishwasher and the amount of dishes.

Energy management

To save energy, the dishwasher will switch off automatically 10 minutes after the last time a button has been pressed or 10 minutes after the end of the program (see “Options, Optimize Standby”).

- Press the ⏻ button to switch the dishwasher back on.

The dishwasher will not turn off while a program is running, during the delay start period, or if there is a fault.

At the end of the program

A buzzer will sound at the end of the program with the door closed.

- Open the door.

0.00 will appear in the time display.

If the program indicator light is still flashing, the program is not yet finished.
Close the door again so that the program can continue until it has finished.

The drying fan may continue to run for a few minutes at the end of the program.

- You can now empty the dishwasher.

⚠ To prevent the risk of steam damage to the counter edging above the dishwasher, it is advisable to leave the door closed until you are ready to unload the dishware. Alternatively you can open the door fully until the dishware is cool enough to unload. Do not leave the door only partially open.

Turning off the dishwasher

At the end of a program:

- Open the door.
- The dishwasher can be switched off at any time using the ⏻ button.

Switching the dishwasher off during a program stops the program.

Turning the dishwasher off during the delay start time will also stop the process.

If the dishwasher is not going to be used for a longer period of time, e.g., while on vacation, the water supply should be turned off.

Unloading the dishwasher

Dishes tend to break and chip more easily when they are hot. Allow the dishes to cool until they are comfortable enough to handle before unloading them.

The dishes will cool much faster if you open the door when the program has ended.

First unload the lower basket, then the upper basket, and finally the cutlery tray (depending on model).
This will prevent water drops from the upper basket and cutlery tray from falling onto the dishes in the lower basket.

Interrupting a program

The program will be interrupted as soon as you open the door.
After four seconds, the indicator light of the selected program and the time display will flash.

- Press the program selection button and close the door within four seconds.

The program will continue from the point at which it was interrupted.

⚠ Water in the dishwasher may be hot. Danger of scalding!
Only open the door if absolutely necessary and exercise extreme caution when doing so. Before closing the door again, leave it ajar for approx. 20 seconds. This will enable the temperature in the wash cabinet to settle. After that, press the program selection button and close the door within four seconds.

Changing a program

If the detergent dispenser flap has already opened, do not change the program.

If a program has already started and you wish to change it, proceed as follows:

- Open the door.
- Turn the dishwasher off with the ⏻ button.
- Turn the dishwasher on again with the ⏻ button.
- Select the desired program.
- Start the program by closing the door within four seconds.

Short

The Short option reduces the duration of programs in which this option is available.

In order to achieve optimum cleaning results, consumption rates are increased with this option.

- Open the door.
- Turn the dishwasher on with the button.
- Select a program.
- Press the button.

The indicator light will light up.

- The program can now be started.

The option selected will remain active for that particular program until the setting is changed.

Turning off the refill indicator

If you consistently use a Tab detergent, you can deactivate the refill indicator if you wish.

- Open the door.
- Turn the dishwasher off with the ⏻ button, if it is turned on.
- Press the program selection button ∨, and, **simultaneously** switch the dishwasher on using the ⏻ button. Keep the program selection button ∨ pressed in for at least four seconds until the lower right program indicator light comes on.

If this does not happen, start the procedure from the beginning again.

- Press the button 9 times.

The indicator light will flash 9 times at short intervals.

The flashing sequence in the time display will indicate whether the refill indicator is switched on or off.

- P 1: Refill indicator is turned on.
- P 0: Refill indicator is turned off.

- Press the program selection button ∨ to change the setting.

The setting is now stored in memory.

- Turn the dishwasher off with the ⏻ button.

If you switch to using detergent that does not contain salt or rinse aid, it is important to remember to add dishwasher salt and rinse aid and to turn the indicators back on.

Delay Start

You can set the start time for a program, e.g., to take advantage of night time electricity rates. The start time can be delayed between 30 minutes and 24 hours.
The delay period is shown in 30 minutes increments for a delay period between 30 minutes and 9 hours 30 minutes. It is shown in hours for periods longer than this.

When using the Delay Start function, make sure that the detergent compartment is dry before adding detergent. Wipe dry with a cloth if necessary. If the compartment is wet, powder detergent can become lumpy and stick to the dispenser, with the result that it is not fully dispensed.
Do not use liquid detergent when selecting Delay Start, as it can run into the dishwasher before it is required.

- Open the door.
- Turn the dishwasher on with the ⏻ button.
- Select the desired program.
- Press the ◷ button.

The last delay start time used will appear in the time display. The ◷ indicator light will light up.

- Set the required delay start time using the ◷ button.

If you keep the ◷ button pressed, the time will increase automatically up to 24 hours. To get back to 0.30 hours, press the ◷ button twice.

- Close the door within four seconds.

If you do not close the door within four seconds, the indicator light of the selected program and the time display will flash.
The program cannot be started until you press the program selection button and close the door within four seconds.

- Open the door if you need to check how long the delay period has left to run.

The time up until the program starts will count down in the display in hours for durations above 10 hours, and in minutes for durations below 10 hours.

When the set time is reached, the program selected will start automatically. The time remaining will appear in the time display and the ◷ indicator light will go out.

How the Delay Start time is shown in the display:

up to 59 minutes:
e.g., 30 minutes = 0.30

1 hour up to 9 hours 30 minutes:
e.g., 5 hours = 5.00

over 10 hours:
e.g., 15 hours = 15

If you open the door during the delay start time, you must then press the program selection button and close the door within four seconds in order to continue the delay start time.

Starting a program before the delay start time has elapsed:

A program can be started before the delay start period has elapsed.
Proceed as follows:

- Open the door.
- Turn the dishwasher off with the ⏻ button.
- Turn the dishwasher on again with the ⏻ button.
- Select the program you want.
- Start the program by closing the door within four seconds.

Buzzer tones

A sequence of audible tones will sound at the end of the program or if there is a fault.

The buzzer at the end of a program and the warning buzzer in the event of a fault will sound 4 times at intervals with a short pause between each set.

The buzzer tones are activated at the factory.
You can deactivate the buzzer that sounds at the end of a program if you wish. The warning buzzer for faults cannot be deactivated.

- Open the door.
- Turn the dishwasher off with the ⏻ button, if it is turned on.
- Press the program selection button ∨, and, **simultaneously** switch the dishwasher on using the ⏻ button. Keep the program selection button ∨ pressed in for at least four seconds until the lower right program indicator light comes on.

If this does not happen, start the procedure from the beginning again.

- Press the ⏲ button 4 times.

The ⏲ indicator light will flash 4 times at short intervals.

The flashing sequence in the time display shows whether the buzzers at the end of the program are activated or deactivated.

- *P 1*: Buzzer tones activated
- *P 0*: Buzzer tones deactivated

- Press the program selection button ∨ to change the setting.

The setting is now stored in memory.

- Turn the dishwasher off with the ⏻ button.

Optimize Standby

“Optimize Standby” is activated by default.

To save energy, the dishwasher will switch off automatically a few minutes after the last time a button has been pressed or after the end of a program.

The dishwasher will not turn off while a program is running, during the delay start period, or if there is a fault.

Optimize Standby can be switched off if you prefer. If you do this the duration before the dishwasher switches off automatically increases to 6 hours. Doing this will increase energy consumption.

- Open the door.
- Turn the dishwasher off with the ⏻ button, if it is turned on.
- Press the program selection button ∨, and, **simultaneously** switch the dishwasher on using the ⏻ button. Keep the program selection button ∨ pressed in for at least four seconds until the lower right program indicator light comes on.

If this does not happen, start the procedure from the beginning again.

- Press the ⏲ button 8 times.

The ⏲ indicator light will flash 8 times at short intervals.

The flashing sequence in the display shows whether or not Optimize Standby is activated.

- P 1: “Optimize Standby” activated
- P 0: “Optimize Standby” deactivated

- Press the program selection button ∨ to change the setting.

The setting is now stored in memory.

- Turn the dishwasher off with the ⏻ button.

Factory default settings

If you have altered any settings from the factory default, you can reset them back to the factory default settings as follows:

- Open the door.
- Turn the dishwasher off with the ⏻ button, if it is turned on.
- Press the program selection button ∨, and, **simultaneously** switch the dishwasher on using the ⏻ button. Keep the program selection button ∨ pressed in for at least four seconds until the lower right program indicator light comes on.

If this does not happen, start the procedure from the beginning again.

- Press the button 19 times.

The indicator light will flash once at a long interval and then 9 times at short intervals.

The flashing sequence in the display indicates whether a setting has been changed from its factory default.

- *P 1*: All settings are set to factory default settings
- *P 0*: At least one setting has been changed

- To reset the dishwasher to the factory default settings, press the program selection button ∨.

The setting is now stored in memory.

- Turn the dishwasher off with the ⏻ button.

Program overview

Program	When to use	Program sequence				
		Pre-wash	Main wash °F/°C	Interim rinse	Final rinse °F/°C	Drying
Normal [1]	Program for regular use to completely wash a full load of normally soiled dishware with the ability to adjust energy and water consumption based on the soil load of the dishware.	As needed	120-140/ 49-60	X	154/ 68	X
Pots & Pans	For heavily soiled dishware and normally soiled pots,pans and utensils with dried on residue; use 20% more detergent than recommended.	2X	165/ 74	X	154/ 68	X
Express	“Quick program” for standard dishware soiling that has not dried on.		109/ 43	X	113/ 45	X
SaniWash	To sanitize dishware, e.g. baby bottles, cutting boards and preparation dishware.		156/ 69	2X	158/ 70	X
Rinse & Hold	To rinse dishes when a complete program is not needed.	X				

[1] This program is the most efficient in terms of its combined energy and water consumption for cleaning normally soiled dishware.
This program is used for energy labeling purposes.

Consumption [2]			Duration [2]	
Energy		Water		
Cold water 50°F/10°C kWh	Hot water 120°F/49°C kWh	Gallons/Litres	Cold water 50°F/10°C h:min	Hot water 120°F/49°C h:min
1.06	1.11	3.2/12.1	2:21	2:02
1.50	1.70	4.0/15.0	3:32	3:17
0.60	0.70	2.9/11.0	0:55	0:46
1.45	1.65	3.6/13.5	2:41	2:27
0.01	0.20	1.1/4.0	0:14	0:14

[2] Values quoted are in accordance with 10 CFR 430 / C373-04. In practice there may be variations to these figures due to variable conditions and data recorded by the sensors. Durations shown will reflect your household conditions.
Selecting program options will also affect consumption levels and program durations (see “Options”).
The energy consumption with a hot water supply includes the energy used to heat the water (exception: EnergySaver, if available).

Check and clean your dishwasher regularly. This will help avoid problems and faults.

⚠ All surfaces are susceptible to scratching.
Contact with unsuitable cleaning agents can alter or discolor all surfaces.

Cleaning the wash cabinet

Generally, the wash cabinet is self cleaning if the correct amount of detergent is used.

If, however, there are limescale or grease deposits in the wash cabinet, these can be removed with a special cleaning agent (available from Miele). Follow the instructions on the packaging.

If you mainly use low temperature programs (< 120°F/50 °C), there is a risk of bacteria and unpleasant odors building up in the wash cabinet. To prevent this happening the dishwasher will automatically increase the temperature in the final rinse of the selected program after several programs using low temperatures have been run.

- Clean the filters in the wash cabinet regularly.

Cleaning the door and the door seal

Bacteria could build up on the door seal and the sides of the dishwasher door as these surfaces are outside the wash cabinet and are not accessed and cleaned by the spray arm jets.

- Wipe the door seals regularly with a damp cloth to remove food deposits.
- Wipe off any food or drink residues which may have dripped onto the sides of the dishwasher door before closing it.

Cleaning the control panel

- The control panel should **only** be wiped with a damp cloth.

Cleaning the door front

⚠ If soiling remains longer, it may happen that the surfaces can become discolored or changed.
Remove any soiling immediately.

- Clean the front with a solution of warm water and a little dishwashing liquid applied with a soft sponge. Wipe the surfaces dry using a soft cloth.

⚠ Glass cleaners may be used to clean the exterior. However **do not** allow them to sit or “puddle”, this can cause damage to the surface.
Remove the cleaner promptly.

To better maintain your appliance avoid the following:

- Cleaning products containing soda, ammonia, acid, or chloride
- Descaling agents
- Abrasive cleaning products, such as scouring powder, scouring liquid, or pumice stones,
- Cleaners containing solvents
- Stainless steel cleaners
- Dishwasher cleaner
- Oven cleaners
- Glass cleaner
- Hard, abrasive brushes or sponges, e.g., pot scourers, brushes or sponges which have been previously used with abrasive cleaning agents
- Eraser sponges
- Sharp metal scrapers
- Steel wool
- Steam cleaning appliances

Filter system

The filter system in the base of the wash cabinet prevents food from being redeposited on dishes. It also protects the circulation pump from damage caused by foreign objects.

⚠ This dishwasher must not be used without all the filters in place!

Collection of coarse soil may cause the filters to clog. The level of soiling and time it takes before the filters need cleaning will vary depending on use.

- Check the condition of the filters regularly and clean them if necessary.

Filter system

- Turn the dishwasher off.

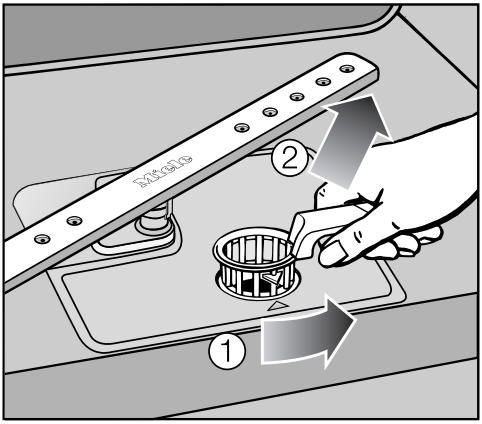

- Turn the handle counter-clockwise to release the filter system ①.
- Lift the filter system out of the dishwasher ②. Remove any coarse particles and rinse the filter well under running water.
  Use a nylon brush if necessary.

⚠ Ensure that coarse soil does not get into the circulation system and cause a blockage.

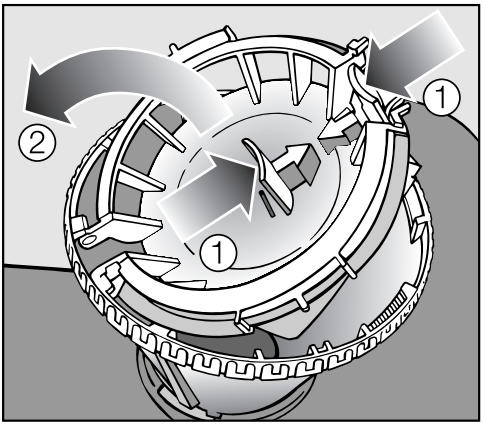

To clean the inside of the filter, the flap must be opened:

- Press catches ① together in the direction of the arrows as shown, and open the filter ②.
- Rinse all the filters under running water.
- Then close the flap so that the catch engages.

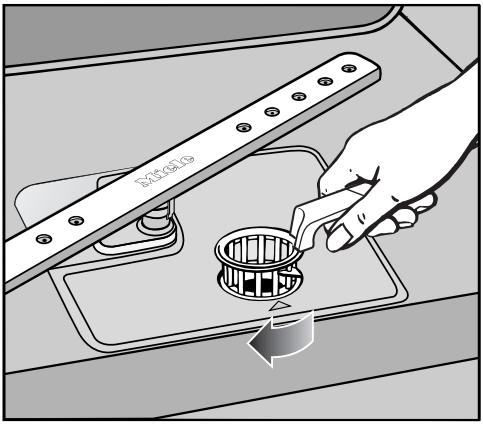

- Replace the filter system so that it lies flat in the base of the wash cabinet.
- Then turn the handle clockwise until both arrows point towards each other. This will lock the filter system in place.

⚠ Take care when you are fitting the filter system that it is secured in position correctly.
Otherwise coarse soil could get into the circulation system and cause a blockage.

Cleaning the spray arms

Particles of food can get stuck in the spray arm jets and bearings. The spray arms should therefore be inspected and cleaned regularly (approx. every 4 - 6 months).

- Turn the dishwasher off.

Remove the spray arms as follows:

- Take out the cutlery tray (if your dishwasher is fitted with one).
- Push the **top** spray arm upwards to engage the inner ratchet. Then unscrew the spray arm.

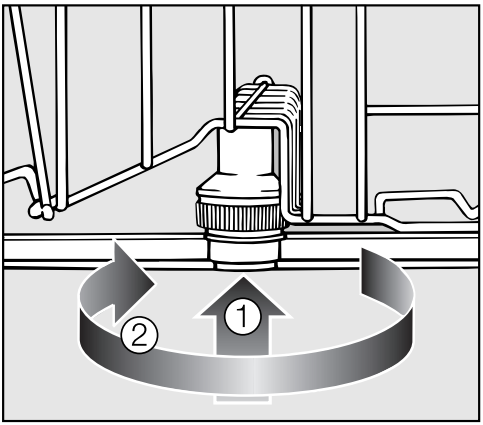

- Push the **middle** spray arm upwards ① to engage the ratchet. Then unscrew the spray arm ②.
- Remove the lower basket.

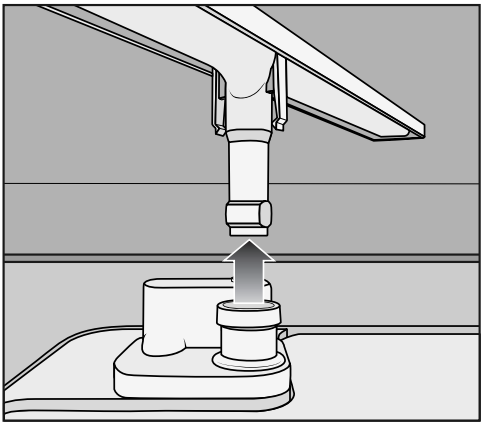

- Pull the **lower** spray arm firmly upwards to remove it.

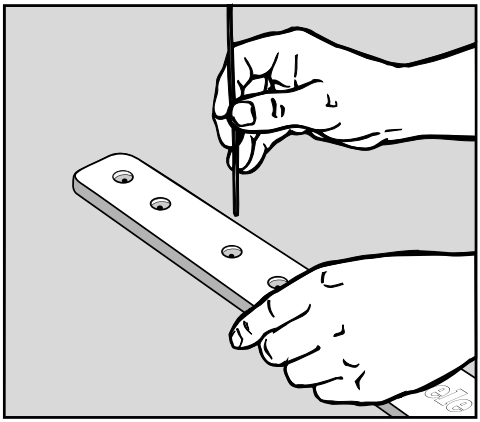

- Use a pointed object to push the food particles that are stuck in the spray arm jets into the spray arm.
- Rinse the spray arms thoroughly under running water.
- Replace the spray arms and check that they rotate freely.

With the help of the following guide, minor faults in the performance of the appliance, some of which may result from incorrect operation, can be put right without contacting Miele Service. This will save time and money.

The following guide may help you to find the reason for a fault, and to correct it. You should, however, note the following:

⚠ Unauthorized or incorrect repairs could cause personal injury or damage to the appliance.
Repair work to electrical appliances must only be carried out by a suitably qualified and competent person in strict accordance with current local and national safety regulations. The manufacturer cannot be held liable for unauthorized work.

Technical problems

Problem	Possible cause and solution
The dishwasher does not start.	The door is not properly closed. ■ Push the door firmly shut.
	The dishwasher is not plugged in. ■ Insert the plug.
	The circuit breaker has tripped. ■ Reset the fuse (see data plate for the correct fuse rating).
	The dishwasher is not switched on. ■ Turn the dishwasher on with the ⏻ button.
The dishwasher stops during a program.	The circuit breaker has tripped. ■ Reset the fuse (see data plate for the correct fuse rating). ■ If the circuit breaker trips again, contact Miele Service.

Problem	Possible cause and solution
The warning buzzer is sounding. **All the program indicator lights flash when the door is opened.** **Fault code FXX appears in the time display.**	There may be a technical fault. ■ Turn the dishwasher off with the ⏻ button. ■ Turn the dishwasher back on after a few seconds. ■ Select the desired program. ■ Close the door. If the indicator lights flash again, there is a technical fault. ■ Contact Miele Service.
Fault F70: **The drain pump is still running, even with the door open.**	The WaterProof System has reacted. ■ Turn off the water supply. ■ Contact Miele Service.
Fault F78:	A fault has occurred in the circulation pump. ■ Turn the dishwasher off for at least 30 seconds with the ⏻ button. ■ Turn the dishwasher back on. ■ Select the desired program. ■ Close the door. If the fault message appears again, there is a technical fault. ■ Contact Miele Service.

Water intake fault

Problem	Possible cause and solution
The dishwasher stopped working shortly after the program started. **The warning buzzer is sounding.** **The *Intake/Drain* indicator light is flashing on and off.**	The water supply is turned off. ■ Turn on the water supply all the way.
The dishwasher stops during a program. **The warning buzzer is sounding.** **The Intake/Drain indicator light flashes.** **Fault code F12 or F13 appears in the time display.**	Before fixing the fault: ■ Turn the dishwasher off with the ⏻ button.
	There is a problem with the water intake. ■ Turn on the water supply fully and start the program again. ■ Clean the water intake filter (see “Frequently asked questions”). ■ The flow pressure at the connection point is lower than 7.25 psi. Contact a plumber.

Water drainage fault

Problem	Possible cause and solution
The dishwasher stops during a program. **The warning buzzer is sounding.** **The *Intake/Drain* indicator light flashes.** **Fault code F11 appears in the time display.**	Before fixing the fault: ■ Turn the dishwasher off with the ⏻ button.
	There is a problem with the water intake. There might be water in the wash cabinet. ■ Clean the filter system (see “Cleaning and care - Filter system”). ■ Clean the drain pump (see “Frequently asked questions”). ■ Clean the non-return valve (see “Frequently asked questions”). ■ Remove any kink or loop in the drain hose.

General problems

Problem	Possible cause and solution
The warning buzzer is sounding. **The indicator light of the selected program and the time display flash.** **The dishwasher does not start or the delay start time stops running.**	The safe mode of the dishwasher was activated. The following takes place: – If you do not close the door within four seconds of the last press of a button at program start – If the door is open for longer than four seconds during a program or within the delay start time. ■ Press the program selection button and close the door within four seconds.
Detergent residue is left in the dispenser at the end of a program.	The dispenser was still damp when detergent was added. ■ Make sure the dispenser is dry before adding detergent.
The dispenser cover cannot be closed.	Detergent residue is blocking the latch. ■ Remove the detergent residue.
The inside of the door and/or the interior walls are wet after a program has finished.	This is caused by the drying system and does not indicate a fault. The moisture will dissipate after a while.
Water remains in the wash cabinet at the end of a program.	Before fixing the fault: ■ Turn the dishwasher off with the ⏻ button.
	The filter system in the wash cabinet is clogged. ■ Clean the filter system (see “Cleaning and care - Filter system”).
	The drain pump or non-return valve is blocked. ■ Clean the drain pump or the non-return valve (see “Frequently asked questions”).
	The drain hose is kinked. ■ Remove the kink.

Noises

Problem	Possible cause and solution
There is a knocking noise in the wash cabinet.	A spray arm is hitting the dishes. ■ Interrupt the program, and rearrange the items which are obstructing the spray arm.
There is a rattling noise in the wash cabinet.	Dishes is moving around in the wash cabinet. ■ Interrupt the program and rearrange loose pieces.
	A foreign object (e.g., a cherry pit) has become lodged in the drain pump. ■ Remove the foreign object from the drain pump (see “Maintenance - Cleaning the drain pump and non-return valve”).
There is a knocking noise from the water pipe	This may be caused by the installation or the diameter of the water pipe. ■ This has no influence on dishwasher function. If in doubt, contact a suitably qualified plumber.

Poor cleaning results

Problem	Possible cause and solution
The dishes are not clean.	The dishes were not loaded correctly. ■ See notes in “Loading the dishwasher”.
	The program was not powerful enough. ■ Select a more intensive program (see “Program overview”).
	Not enough detergent was dispensed. ■ Use more detergent, or change your detergent.
	Items are blocking the path of the spray arms. ■ Rearrange the items so that the spray arms can rotate freely.
	The filter system in the base of the wash cabinet is not clean or is not correctly fitted. This may cause the spray arm jets to get blocked. ■ Clean and/or fit the filter system correctly. ■ Clean the spray arm jets if necessary (see “Cleaning and care - Cleaning the spray arms”).
	The non-return valve is open and blocked. Dirty water has flowed back into the wash cabinet. ■ Clean the drain pump and the non-return valve (see “Frequently asked questions”).
Smearing appears on glassware and cutlery. There is a bluish sheen on the surface of glassware; film can be wiped off.	The rinse aid dosage is set too high. ■ Decrease the dosage (see “Before using for the first time - Rinse aid”).

Problem	Possible cause and solution
Dishes is not dry or cutlery and glasses are spotty.	The rinse aid dosage is set too low or the rinse aid reservoir is empty. ■ Replenish the reservoir, increase the dosage, or change the brand of rinse aid (see “Before using for the first time - Rinse aid”).
	Dishes was taken out of the cabinet too soon. ■ Leave it in for longer (see “Operation”).
	Combination tabs have been used which have impaired drying performance. ■ Change your detergent, or replenish the rinse aid (see “Before using for the first time - Rinse aid”).
Glasses have a brownish-blue discoloration; the deposit cannot be wiped off.	Detergent deposits. ■ Switch to another detergent.
Glasses are dull and discolored; the deposit cannot be wiped off.	The glassware is not dishwasher-safe. The surfaces are affected. ■ There is no remedy. Purchase glassware which is dishwasher-safe.
Tea or lipstick stains have not been completely removed.	The wash temperature of the selected program was too low. ■ Select a program with a higher wash temperature.
	The bleaching effect of the detergent is too low. ■ Switch to another detergent.
Plastic parts are discolored.	Natural dyes, e.g., from carrots, tomatoes, or ketchup may be the cause. The amount of detergent used or its bleaching effect was not sufficient to deal with natural dyes. ■ Use more detergent (see “Operation - Detergent”). Discoloration is irreversible.
White residue is visible on dishes and cutlery, clouding occurs on glassware; this film can be wiped off.	The rinse aid dosage is too low. ■ Increase the dosage (see “Before using for the first time - Rinse aid”).
	An unsuitable Tab detergent has been used. ■ Change your detergent.

Problem	Possible cause and solution
There are rust stains on the cutlery.	The affected items are not corrosion resistant. ■ There is no remedy. Purchase cutlery which is dishwasher-safe.

Cleaning the drain pump and non-return valve

If the water has not been pumped away at the end of a program, the drain pump or the non-return valve might be blocked. They are, however, easy to clean.

- Disconnect the dishwasher from the electrical supply. Turn off the dishwasher and withdraw the plug.
- Take the filter system out of the wash cabinet (see “Cleaning and care, Cleaning the filters”).
- Scoop the water out of the wash cabinet using a suitable container or utensil.

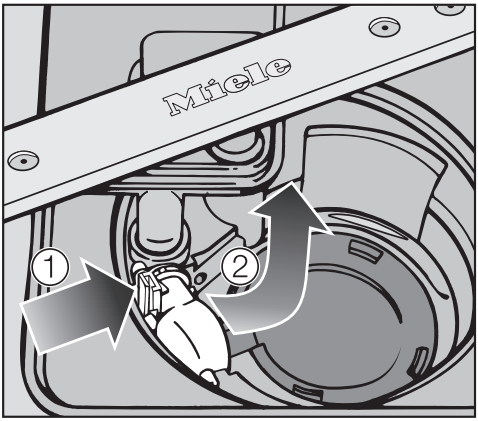

- Press the catch for the non-return valve inwards ①.
- Tilt the non-return valve inwards until it is released ②.
- Rinse it thoroughly under running water and remove any dirt from the non-return valve.

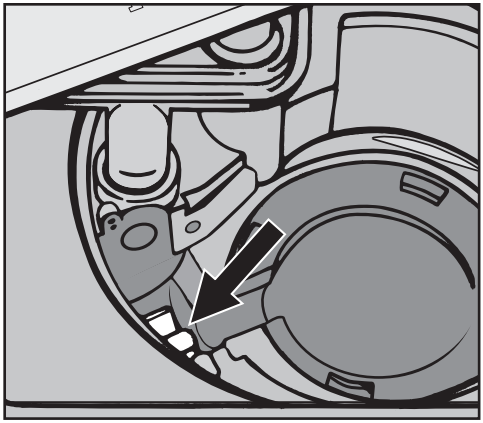

The drain pump is located underneath the non-return valve (see arrow).

- Remove all foreign objects from the drain pump (glass or bone splinters). Before returning the non-return valve, check that the drain pump is not blocked. Spin the impeller several times in both directions to check for obstructions.
- Carefully reinsert the non-return valve and secure it with the locking clamp.

⚠ Make sure the locking clamp clicks into place!

⚠ Be careful not to damage any delicate components when cleaning the drain pump and the non-return valve.

Repairs

For problems that you cannot resolve on your own, please contact:

- your Miele dealer or
- Miele Service

The telephone number for Miele is listed at the back of these instructions.

In the event of a fault which you cannot correct yourself please contact the Miele Service Department at the phone number on the back of this booklet.

Warranty

For more information, please refer to the included warranty.

MieleCare (USA only)

MieleCare, our Extended Service Contract program, gives you the assurance of knowing that your appliance investment is covered by 5 years of worry free ownership.
MieleCare is the only Extended Service Contract in the industry that guarantees repairs by a Miele Authorized Service Provider using genuine Miele parts. Only genuine Miele parts installed by factory trained professionals can guarantee the safety, reliability, and longevity of your Miele appliance.

Please note that unless expressly approved in writing by Miele's Service department, Extended Service Contracts offered by other providers for Miele products will not be recognized by Miele. Our goal is to prevent unauthorized (and untrained) service personnel from working on your Miele products, possibly doing further damage to them, you and/or your home.

To learn more about **MieleCare** Extended Service Contracts, please contact your appliance dealer or visit us online at:
http://www.mieleusa.com

Optional accessories

Dishwasher detergent and rinse aid, as well as cleaning and care products, are available as optional accessories.
All the products are designed for use with Miele dishwashers.

These and many other useful products can be ordered from a Miele dealer or via the Miele Website (see end of this booklet for contact details).

Dishwasher detergent, rinse aid, and salt

When you decide to buy a Miele dishwasher, you choose excellent quality and performance. However, ensuring that your dishwasher always delivers the best possible results will also depend on your choice of dishwasher detergent, rinse aid, and dishwasher salt, as cleaning results can vary depending on the brand used.
With Miele products, you can be sure of optimum results as these products have been specially designed for Miele dishwashers.

Detergent tabs

- Sparkling results even with stubborn food deposits
- Combination product with other components such as rinse aid, salt, and glass protection additives
- Phosphate-free – kind to the environment
- Water-soluble wrapping - no need to unwrap

Rinse aid

- For sparkling glasses
- Helps dishware to dry
- With glass protection against corrosion
- Specially designed cap for accurate and easy dispensing

Dishwasher care products

Miele cleaning and care products provide optimum care for your dishwasher.

Dishwasher cleaner

- Cleans the dishwasher effectively and thoroughly
- Removes grease, bacteria, and unpleasant odors
- Ensures excellent dishwashing results

Dishwasher descaler

- Removes heavy lime scale deposits
- Mild and gentle with natural citric acid

Dishwasher conditioner

- Removes odors, lime scale, and light deposits
- Maintains the elasticity and leak tightness of the seals

Dishwasher freshener

- Neutralizes unpleasant odors
- Fresh, pleasant lime and green tea scent
- Easy to attach to the dishwasher basket
- Very economical, lasts for 60 wash cycles

Installation Instructions

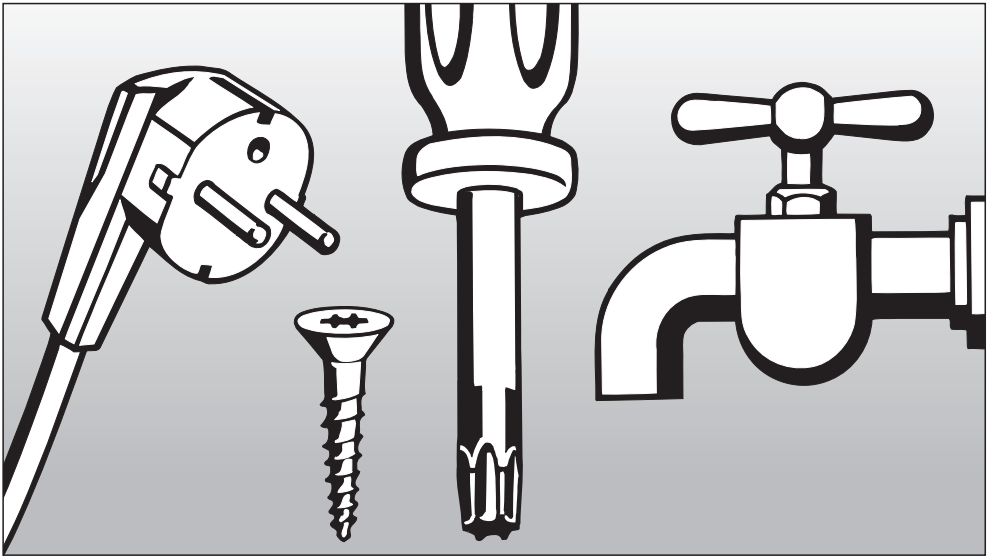

Please refer to the Installation Diagram supplied with these instructions.
To comply with IEC sound testing protocols, please contact Miele for additional instructions.

Information is subject to change. Please refer to our website to obtain the most current product specification, technical & warranty information.

Electrical connection

⚠ Installation, repairs and other work by unqualified persons could be dangerous.

Check that the voltage, frequency and fuse rating shown on the data plate match the household mains supply.

The power outlet must be accessible after installation. Do not use an extension cord to connect the dishwasher to the mains. Danger of overheating! See data plate on the right side of the door.

A damaged power cord must only be replaced with a genuine Miele cord by a Miele service technician.

Grounding instructions

THIS APPLIANCE MUST BE GROUNDED.

In the event of a malfunction or breakdown, grounding will reduce the risk of electric shock by providing a path of least resistance for the electrical current. This appliance is equipped with a cord having an equipment grounding conductor and a grounding plug. The plug must be plugged into an appropriate outlet that is installed and grounded in accordance with all local codes and ordinances.

⚠ Improper connection of the equipment grounding conductor can result in electric shock.

Do not modify the plug provided with the appliance; if it will not fit the outlet, have a proper outlet installed by a qualified electrician.

If there is any question concerning the proper electrical connection or grounding of this appliance to the powersupply, please consult a licensed electrician or call Miele's Technical Service Department:
USA: 1-800-999-1360
CDN: 1-800-565-6435

Specifications

The dishwasher comes equipped with a 4 ft (1.2 m) powercord (measured from the rear of the dishwasher) with a molded plug for connection to 120 V, 60 Hz, 15 A grounded receptacle.

Hardwired electrical connection
It is possible to hardwire this appliance to an existing power cable.

⚠ CAUTION: Before servicing, disconnect the power supply by either removing the fuse, shutting off the power main or manually “tripping” the circuit breaker.

Installation work and repairs should only be performed by a qualified technician in accordance with all applicable codes and standards. Repairs and service by unqualified persons could be dangerous and the manufacturer cannot be held responsible.

Before connecting the appliance to the power supply, make sure that the voltage and frequency listed on the data plate correspond with the household electrical supply. This data must correspond to prevent machine damage. Consult an electrician if in doubt.

GROUNDING INSTRUCTIONS

THIS APPLIANCE MUST BE GROUNDED.

This appliance must be connected to a grounded metal, permanent wiring system, or an equipment-grounding conductor must be run with the circuit conductors and connected to the equipment-grounding terminal or lead on the appliance.

⚠ Prior to making a hardwire connection to the terminal, remove the powercord. Otherwise there will be a risk of electric shock from the attached plug.

An existing flexible supply cord or cable shall have a minimum thickness of AWG 14.
120 V, 60 Hz, 15 A fuse rating
Black wire (live): connect to L
White wire (neutral): connect to N
Green wire (ground): connect to ⏚

⚠ After attaching the permanent power supply cord, check that all screws on the terminal block and the strain relief are tightened.

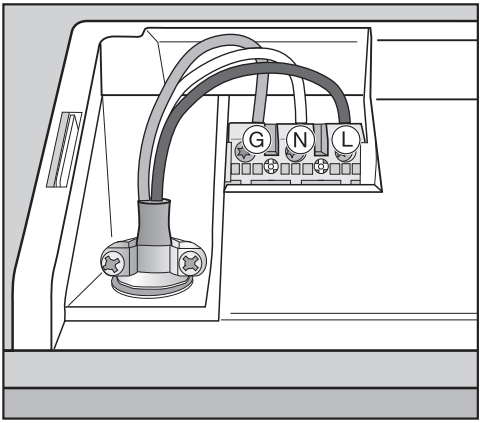

Water connection

Water intake

⚠ Water in the dishwasher must not be used as drinking water.

- The dishwasher may be connected to a cold or hot water supply up to a maximum of 140°F/60°C.
  For reduced energy consumption, we recommend a cold water connection. We recommend connection to a hot water supply only if it is economical, e. g. a solar-powered supply with recirculation line. When connected to a hot water supply, all program phases which would otherwise be carried out with cold water will be carried out with hot water
- The inlet hose is approx. 5 ft long. A 5 ft long flexible metal hose (pressure tested to 2030 psi) is available as an optional accessory if required.
- A faucet with a 3/8" male thread must be provided on site.
- This appliance is constructed to comply with ANSI/ASSE 1001 // IEC/EN/DIN 61770 // VDE 0700 Part 600, and may be connected to a suitable supply without an extra non-return valve if national regulations permit.
- The water pressure (flow pressure at the connection point) must be between 7.25 - 145 psi. If the water pressure is too high, a pressure relief valve must be fitted.

After connecting the dishwasher to the water supply, check that the water intake is airtight.

⚠ To avoid any damage to the appliance, the dishwasher must only be operated when it is connected to a fully vented plumbing system.

⚠ The intake hose must not be shortened or damaged in any way as it contains electrical components.

⚠ Do not sit the dishwasher on the hose. The hose needs to be free of kinks and able to move freely after installation. Do not place hose or power cord next to a heat source e.g. hot water pipes. Do not expose hose or power cord to corrosive substances (e.g. chloride). Damage of hose or power cord could cause electrical shock or water damage.

Drainage

- The machine comes equipped with a built-in non-return valve on the discharge side to prevent waste water from flowing back into the dishwasher.
- Take the drain line of the dishwasher and attach the drain line as high as possible under the counter rim of the kitchen sink before connecting the end to the drain. The loop will serve to prevent a backed up drain or large volume of water in the sink from siphoning back into the dishwasher.
- The dishwasher is supplied with approx. 5' 11" (1.5 m) of flexible drain hose with an internal diameter of 7/8" (22 mm).
- The drain hose can be extended using extensions and adapters. The drainage length must not be longer than 13' 1 1/2" (4 m) and the delivery head must not exceed 3' 3 3/8" (1 m).
- If the hose is to be directly fitted to the drainage outlet on site, use the hose clip supplied (see installation diagram).
- The hose can be directed to the left or the right of the appliance.
- The on-site connector for the drain hose can be adapted to different widths of hose. If the connector protrudes too far into the drain hose, it will need to be shortened. Otherwise the drain hose may become blocked.
- The drain hose must not be shortened.

⚠ Make sure that there are no kinks in the hose, and that it is not squashed or stretched.

After servicing the appliance, ensure that the drain does not leak.

Venting the drain

If the on-site drain connection is situated lower than the guide path for the bottom basket rollers in the open door, the drain must be vented. Otherwise a siphoning effect during a program can cause the appliance to empty itself of water.

■ To vent: open the dishwasher door fully.

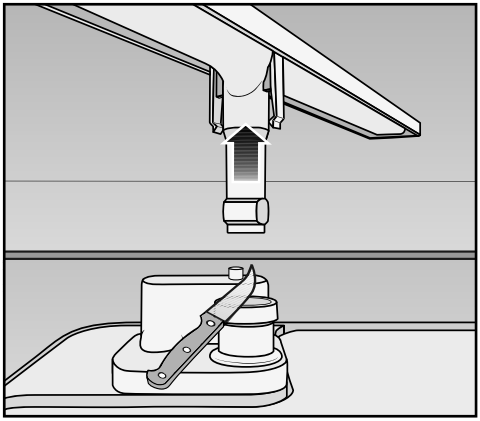

■ Pull the lower spray arm firmly upwards to remove it.

■ Cut off the top of the vent valve in the wash cabinet.

Sound emission testing

Prerequisites for sound emission tests

Load the dishwasher with **16 standard place settings** and use the *Normal* program.

Setup for sound emission tests

The dishwasher must be set up according to the following specifications.

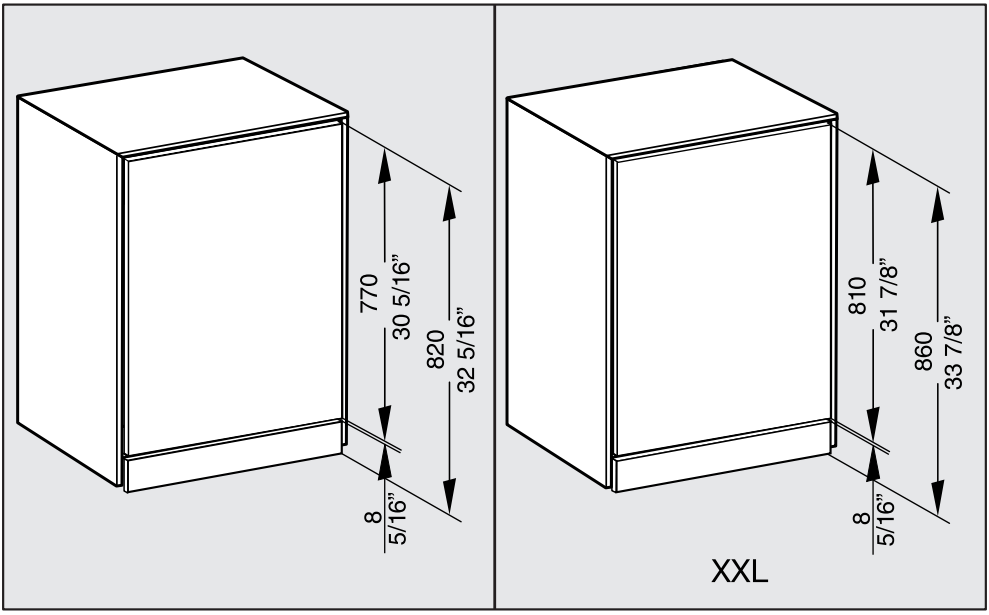

- Install the dishwasher into an analyzing unit.
- Secure the front panel.

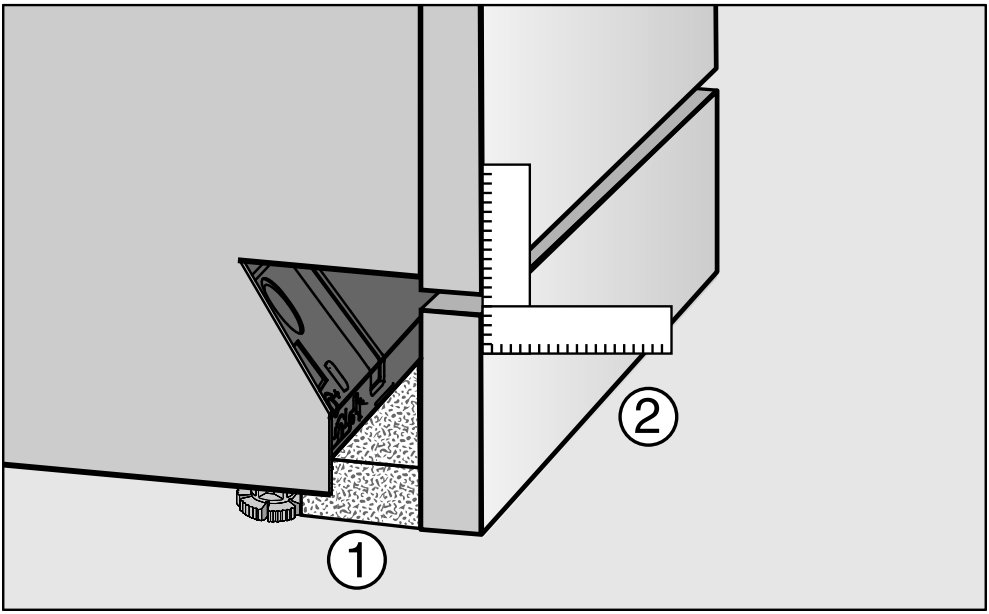

- Push the provided fleece strips (depending on model) under the toe-kick until it is flush with the appliance feet ①.
- Push the toe-kick into place in such a way that it is flush with the door front ②.

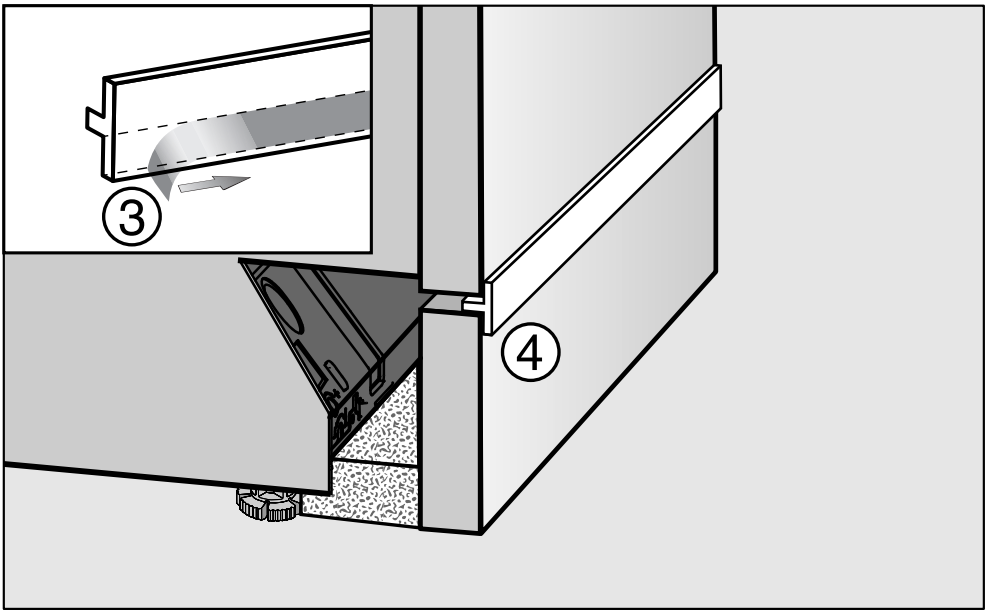

- Remove the protective film from the provided insulating strip (depending on model) ③.
- Push the insulating strip into the front top edge of the toe-kick ④.

Please have the model and serial number of your appliance available when contacting Customer Service.

U.S.A.

Miele, Inc.

National Headquarters
9 Independence Way
Princeton, NJ 08540
Phone: 800-843-7231
Fax: 609-419-4298
www.mieleusa.com

Customer Service & Support
Phone: 888-99-MIELE(64353)
Fax: 888-586-8056
service@mieleusa.com

Canada

Importer
Miele Limited

Headquarters and Miele Centre
161 Four Valley Drive
Vaughan, ON L4K 4V8
www.miele.ca

Customer Care Centre
Phone: 800-565-6435
905-532-2272
customercare@miele.ca

International Headquarters
Miele & Cie. KG
Carl-Miele-Straße 29
33332 Gütersloh
Germany

Miele

G 4971 / G 4972 / G 4976 / G 4977

en-US

M.-Nr. 10 544 680 / 04