KPF48UBL New product

Portofino

48” Portofino Chimney Hood, Black

EAN13: 8017709261702

TECHNICAL SPECIFICATIONS

Operating mode: vented or recirculating

Control knobs

4 speed levels

Maximum extraction power: 600 CFM

4 LED lights

Noise level at maximum speed: 69 dB(A)

Motor power: 455 W

4 stainless steel grease filters

ELECTRICAL SPECIFICATIONS

Nominal power: 535 W

Voltage: 120 V

Frequency: 60 Hz

Options

- **FLTK-1** - Charcoal filter

Versions

- **KPF48UOG** - Olive green
- **KPF48URD** - Red
- **KPF48UYW** - Yellow
- **KPF48UWH** - White
- **KPF48UOR** - Orange
- **KPF48UX** - Stainless Steel
- **KPF48UAN** - Matte Black

SMEG U.S.A. INC.
A&D BUILDING
150 EAST 58th STREET, 7th FLOOR
NEW YORK, NY, 10155
Tel. +1 212 265 5378
Fax +1 212 265 5945

KPF48UBL

Portofino

wall mounted ventilation hood
48""
black

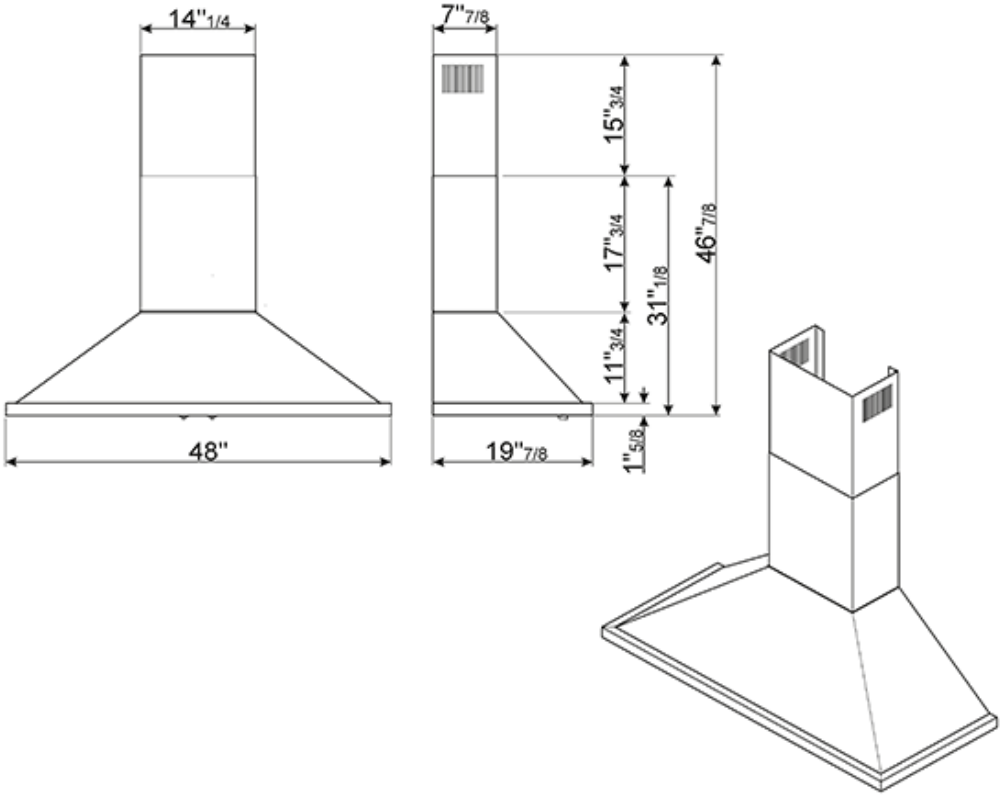

SMEG U.S.A. INC.
A&D BUILDING
150 EAST 58th STREET, 7th FLOOR
NEW YORK, NY, 10155
Tel. +1 212 265 5378
Fax +1 212 265 5945