TOP MOUNT REFRIGERATOR

MODELS:

WRT138FZDW03 (White)
WRT138FZDB03 (Black)
WRT138FZDM03 (Stainless)

02/10/2021
© 2021 Whirlpool Corporation
Part No. W11528761 Rev. A

CABINET PARTS

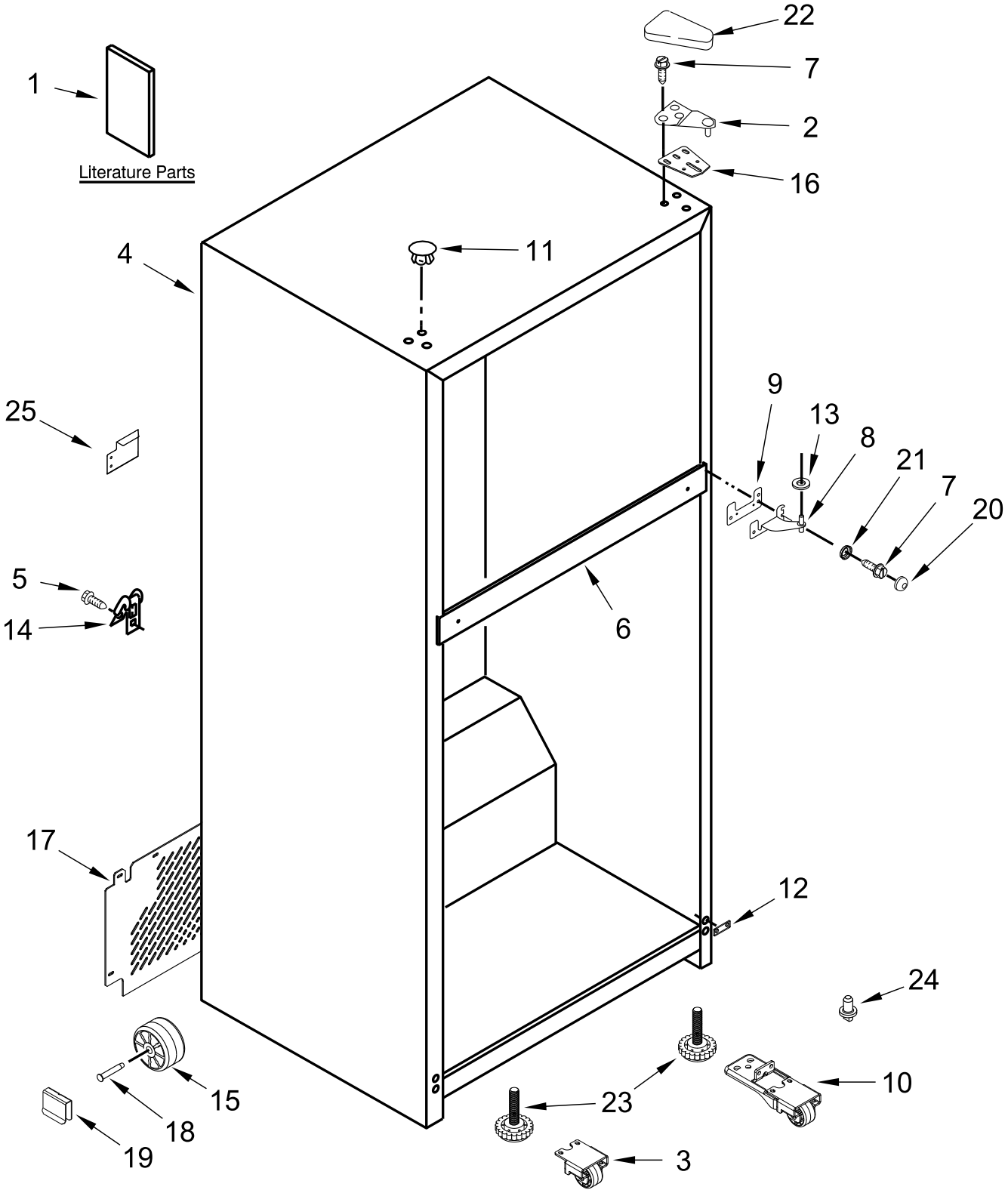

CABINET PARTS

Illus. No.	Part No.	Description
1		Literature Parts
	W10872127	Tech Sheet
	W10885252	Use and Care Guide
	W11095243	Energy Label
2	2261963	Assembly, Top Hinge
3	W10842654	Assembly, Roller
4		Cabinet (Not Serviced)
5	489442	Screw
6		Rail, Center (Not Serviced)
7	489497	Screw
8	2254618	Hinge, Center
9	2183852	Shim, Hinge Center
10	W10843861	Lower Hinge and Roller Assembly
11		Plug, Hole
	W10520304	White
	W10520305	Black
	W10520307	Grey
12	W11359355	Shim, Bottom Hinge
13	489341	Washer, Plastic
14	W11242280	Clamp, Power Cord
15	W10475495	Roller
16		Shim, Top Hinge
	2221885	White
17	W11307288	Cover, Unit
18	981126	Axle, Roller
19	2174706	Clip, Roller
20		Cap, Dome
	W10674771	White
	W10679135	Black
	W10679139	Grey
21	W10674773	Cap, Washer Dome
22		Cover, Hinge
	2213360	White
	2213363	Black
	2254510	Grey
23	W10671258	Leveler
24	W10638688	Hinge Pin
25	W11458717	Access Cover, Valve

LINER PARTS

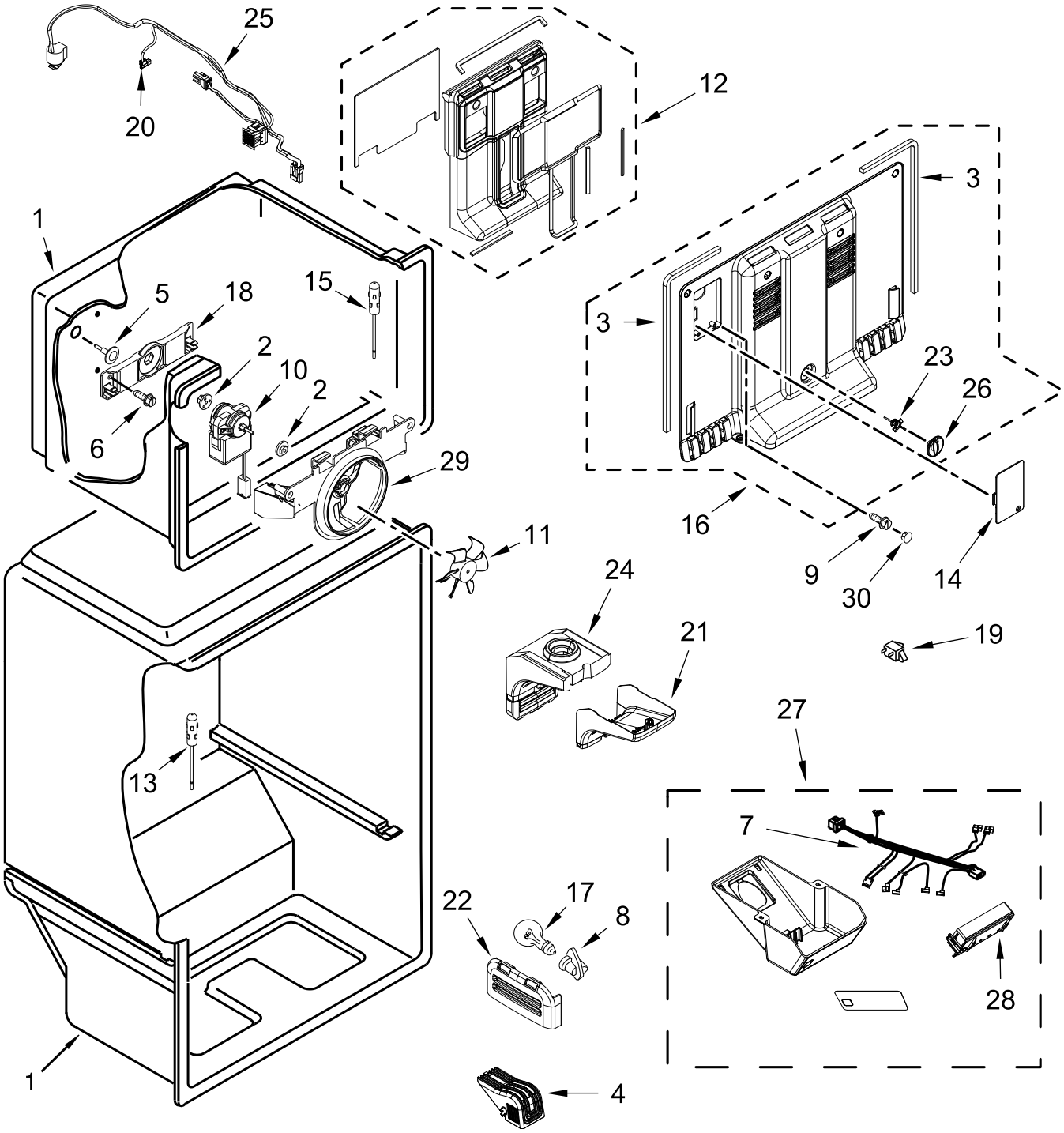
25
20
12
3
1
5
18
15
3
2
10
2
23
26
6
29
16
11
9
30
14
24
21
19
27
13
7
17
22
8
28
1
4

LINER PARTS

Illus. No.	Part No.	Description
1		Liner (Not Serviced)
2	2197380	Grommet
3	W10709194	Gasket, Evaporator Cover
4	W11242281	Cover, Light
5		Hole Plug
	941839	White
6	488208	Screw
7	W11203360	Wire Assembly, Control Box
8	2162085	Socket, Light
9	8281232	Screw
10	2315539	Motor, Evaporator Fan
11	2163777	Fan Blade
12	W10676682	Assembly, Evaporator Plenum
13	W10384183	Thermistor
14	W10677275	Cover, Hole
15	W10383615	Thermistor, Evaporator
16	W10668482	Cover, Evaporator
17	W11125625	Lamp, LED
18	2254454	Bracket, Evaporator Fan Rear
19	W11428639	Switch, Rocker Arm
20		Thermal Fuse (Not Serviced)
21	W10705209	Cover, Air Diffuser
22	W10638176	Cup, Air Diffuser
23	W10570951	Baffle, Air Manual
24	W10633587	Assembly, Air Diffuser
25	W11200746	Assembly, Evaporator Fan Wire (Includes Thermal Fuse)
26	W10570952	Knob, Air Control
27	W11207397	Assembly, Box Control
28	W11176863	Control, Electronic
29	W10321162	Bracket, Fan Motor
30	W10487421	Cover, Screw

SHELF PARTS

FREEZER

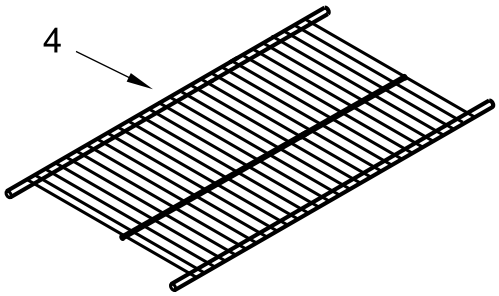

REFRIGERATOR

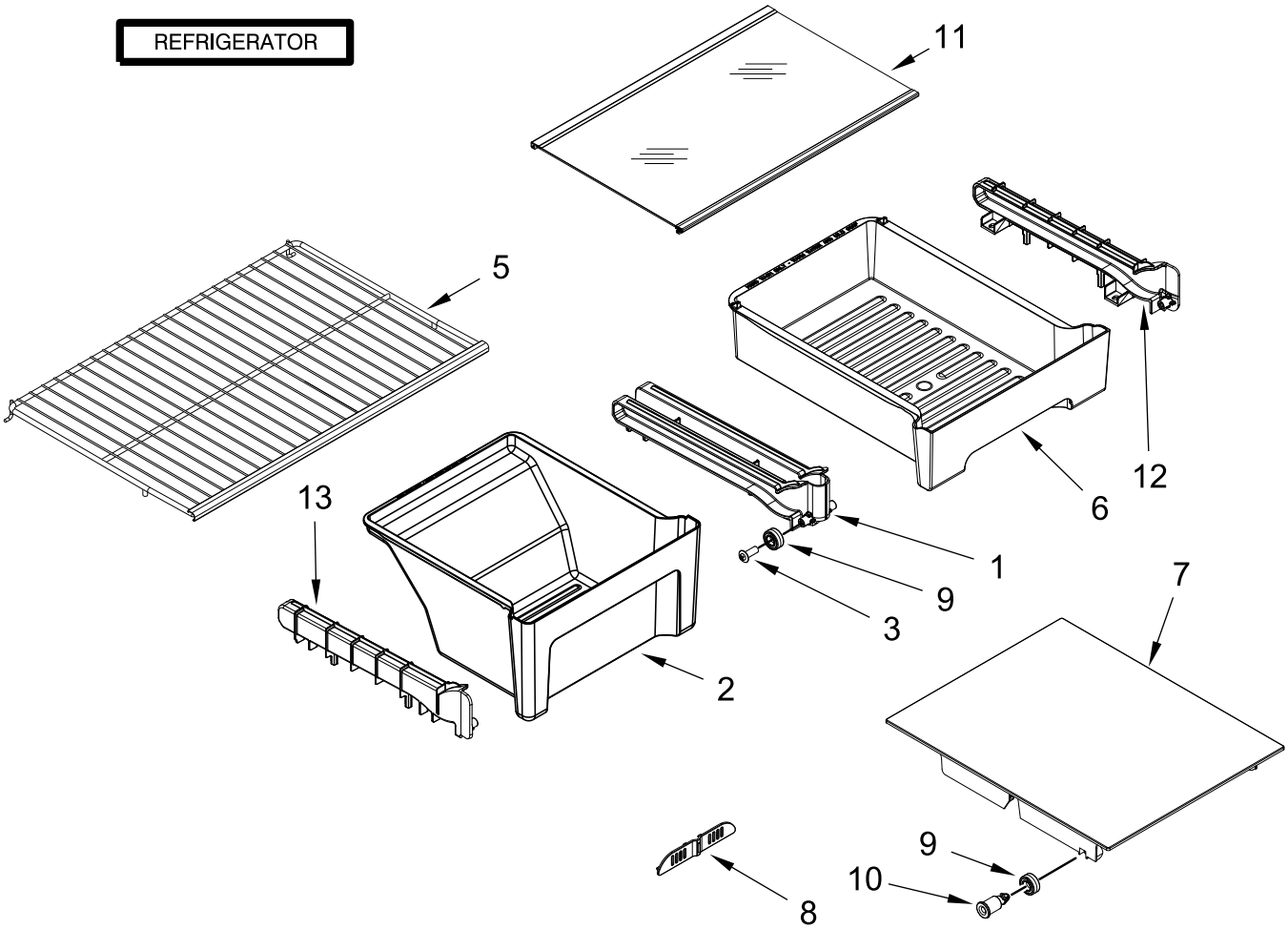

SHELF PARTS

Illus. No.	Part No.	Description
1	W11465992	Track, Rail Center
2	W10668872	Assembly, Crisper Pan
3	3400065	Screw (Stainless)
4	W10628714	Shelf, Wire
5	W10310934	Shelf, Refrigerator Wire (30")
6	W10714006	Pan, Meat
7	W10628697	Cover, Meat Pan
8	W10356844	Control, Humidity
9	W10628713	Roller, Pan
10	W10628712	Axle, Roller
11	W11167857	Shelf Assembly, Crisper
12	W11465990	Rail, Track (Right Hand)
13	W11465991	Rail, Track (Left Hand)

DOOR PARTS

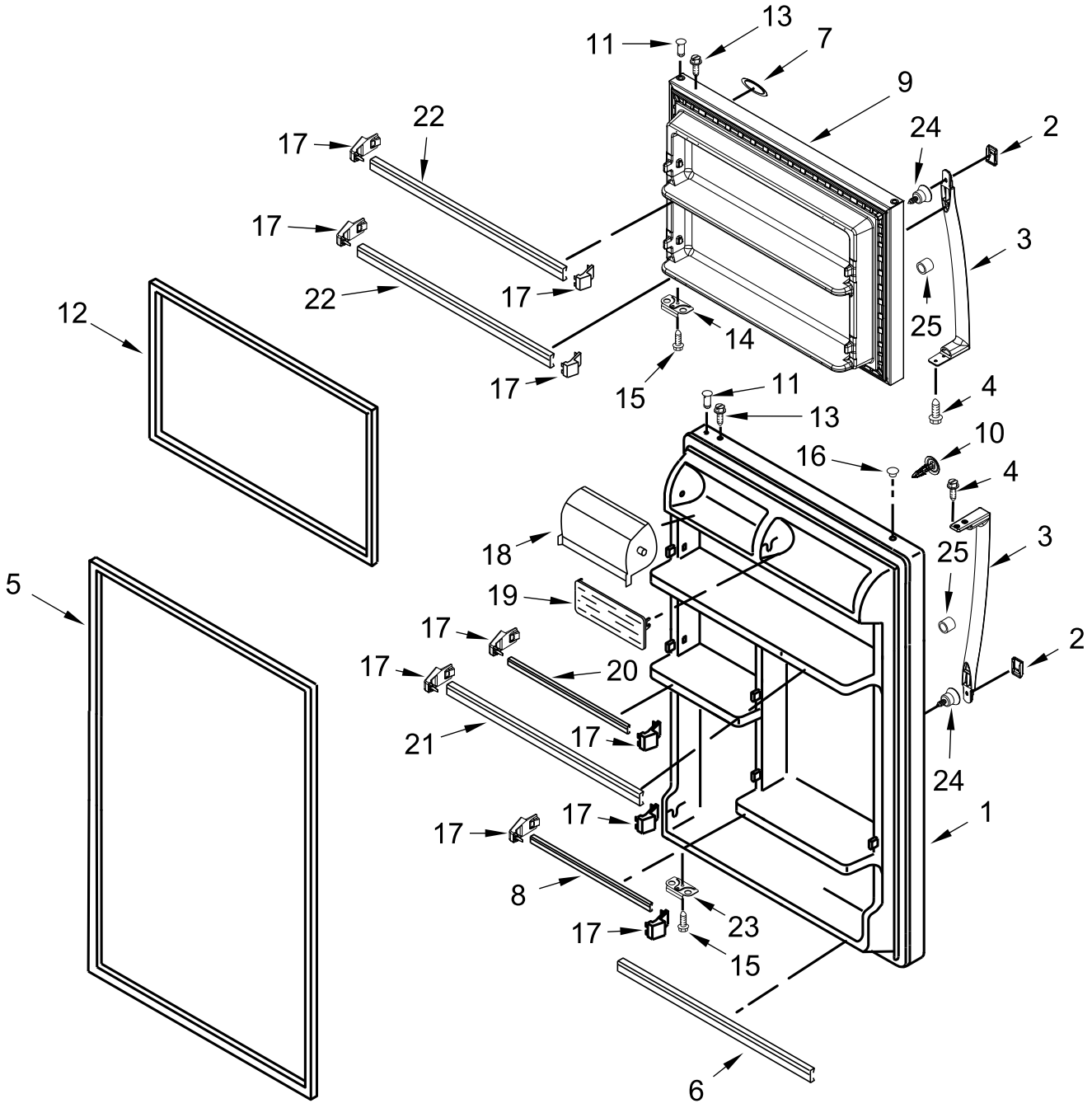
13
11
7
9
22
24
2
17
17
3
22
17
25
12
14
17
15
11
4
13
10
16
4
18
3
25
5
19
17
2
17
20
21
17
24
17
1
17
8
23
17
15
6

DOOR PARTS

Illus. No.	Part No.	Description
1		Refrigerator Door (Includes Door Gasket)
	W10636410	White
	W10668874	Black
	W10638684	Stainless
2		Handle, Trim
	W10672338	White
	W10672339	Black
	W10864206	Grey
3		Handle, Door
	W10672333	White
	W10672334	Black
	W10653470	Stainless
4	489357	Screw
5		Gasket, Door
	W10638676	White
	W10678768	Black
	W11030683	Grey
6	W10719703	Trim, Door
7	W10884775	Badge
8	W10719700	Trim, Door
9		Freezer Door (Includes Door Gasket)
	W10636409	White
	W10668875	Black
	W10638683	Stainless
10		Plug, Hole
	W10663736	White
	W10663737	Black
	W10663739	Grey
11	2262054	Thimble
12		Gasket, Door
	W10638675	White
	W10667843	Black
	W11030682	Grey
13	8281206	Screw
14	2189202	Bracket, Door Stop
15	488921	Screw
16		Plug, Hole
	2212648	White
	2212651	Black
	2254517	Grey
17	2156003	Endcap, Trim
18	2218113	Door, Compartment
19	2188234	Door, Flip Up
20	W10719701	Trim, Shelf Door
21	W10678772	Trim, Door
22	W10719702	Trim, Door
23	W10638692	Bracket, Door Stop
24	W10170540	Screw
25	W10511911	Bushing, Handle

UNIT PARTS

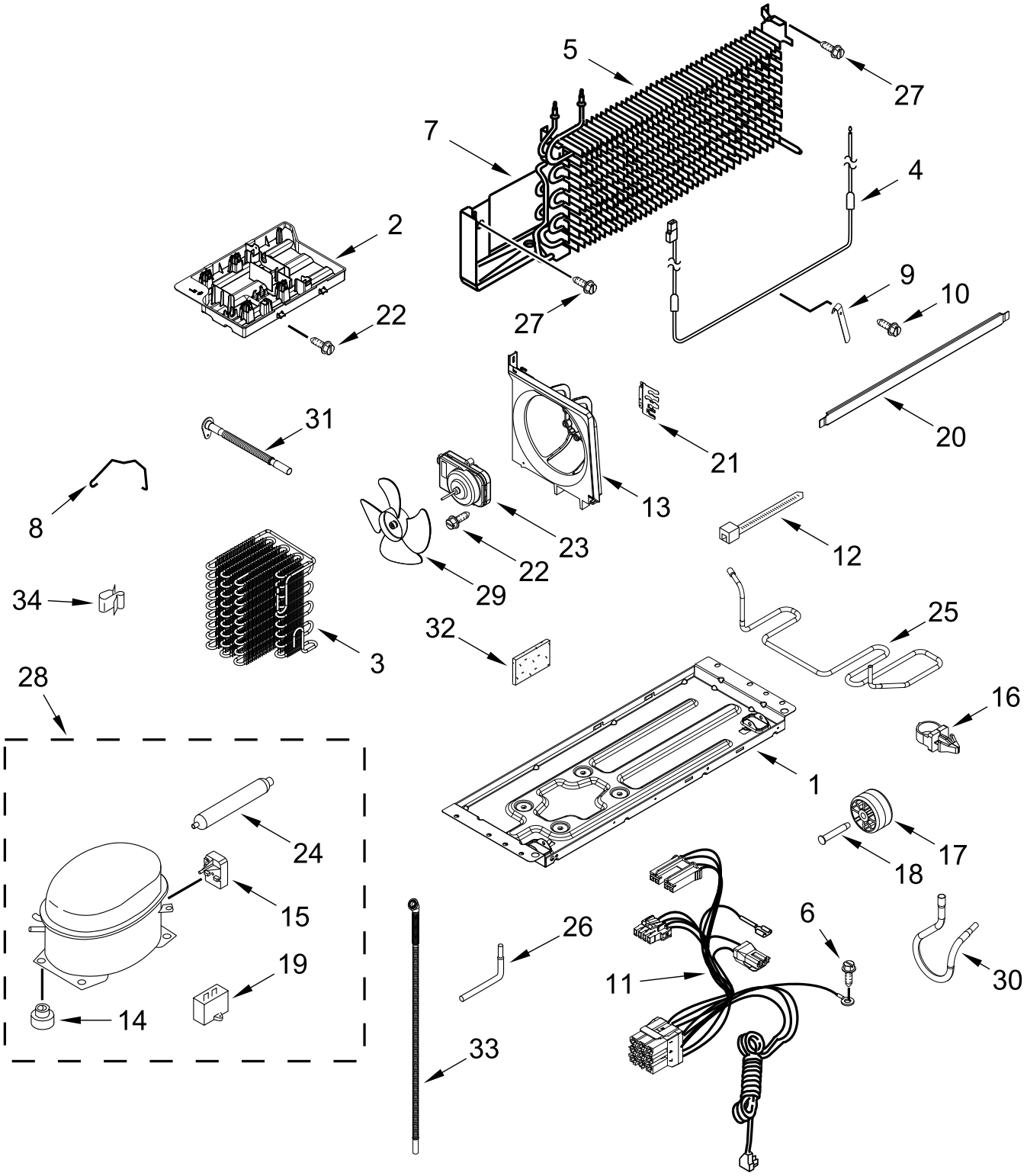
5
27
7
4
2
9
10
22
27
31
21
20
8
13
23
22
12
29
34
3
32
25
28
16
1
24
17
18
15
26
6
19
11
30
14
33

UNIT PARTS

Illus. No.	Part No.	Description
1	W10638694	Support Plate, Compressor
2	W10633582	Tray, Evaporator
3	W10633575	Condenser
4	W10316428	Heater, Defrost
5	W10570565	Assembly, Evaporator
6	488500	Screw
7	W10314195	Shield, Heat
8	W10174384	Strap, Bale
9	2258429	Heat Probe
10	489478	Screw
11	W11238433	Harness, Unit
12	2263990	Tie, Wire
13	W11438498	Bracket, Fan
14	10835903	Grommet
15	W10798721	Device, Start
16	2219077	Clip, Harness
17	W10475495	Roller
18	2179826	Axle, Rivet
19	W10590088	Capacitor
20	W10300902	Cover, Heater
21	W10314197	Bracket, Evaporator
22	W10622701	Screw
23	W10909387	Motor, Condenser Fan
24	W10669573	Drier
25	W10633584	Tube, Discharge
26	2212848	Tube, Process
27	489442	Screw
28	W10798720	Compressor
29	W10817071	Blade, Fan
30	W10633577	Tube, Suction
31	W11383479	Extension, Drain Tube
32	2215468	Insulation, Sound
33	W10633573	Tube, Drain
34	2326941	Clip, Wire
		FOLLOWING PARTS NOT ILLUSTRATED
	978025	Valve, Access (1/4")
	978026	Valve, Access (5/16")
	978027	Valve, Access (3/8")
	978029	Valve, Access (5/8")
	978030	Valve, Access (3/4")
	876764	Valve, Access (3/16")
		REFRIGERANT CHARGE
		4.2 oz (R-134A)

OPTIONAL PARTS

FOLLOWING PARTS NOT ILLUSTRATED

Illus. No.	Part No.	Description
	978941	Insulation, Fiberglass (63 1/2" x 35 1/2" x 2 5/8")
	212643	Sealer, Gum (4 Feet)
	479502	Tape, Vinyl (3/4 x 108")
	876305	Insulation Kit (14 Pieces, 3" x 24" x 48")
	876370	Insulation (2 Pieces, 3" x 24" x 48")
	876029	Kit, Foam Slab (30" x 32 1/2" x 1 1/2")
	505587	Sealer, Mastic (1 Qt)
	511873	White Porcelain (2 oz.)
	542638	Grease, Silicone (1/2 Oz.)
	542639	Cement, Alumilastic (1 1/4 Oz.)
	606755	Bag
	833938	Kit, Terminal Connector
	503695	Cork, Sealer
	8003RP	Kit, Water Inlet
	W10662124	Door Reversal Kit, White Model
	W10676239	Door Reversal Kit, Black Model
	W10676240	Door Reversal Kit Stainless Model

PAINT, TOUCH-UP (1/2OZ.)

Illus. No.	Part No.	Description
	72017	White
	72032	Black
	4392899	Biscuit/Bisque
	W10134625	Apollo Grey

PAINT, PRESSURIZED SPRAY (12 OZ.)

Illus. No.	Part No.	Description
	350942	White Primer
	350939	Enamel, Black
	350930	White
	4392901	Biscuit/Bisque

PAINT, BULK (1 QT.)

Illus. No.	Part No.	Description
	799344	White (Uncut)
	4392900	Biscuit/Bisque

TORX SCREW WRENCH

Illus. No.	Part No.	Description
	1117510	Torx Key

Illus. No.	Part No.	Description
	W11401490	Icemaker Kit
	W11403893	Pan, Ice
	W11403892	Shelf, Wire